Die Components
Normalien
Componenti

RENAULT

OMCR®

STANDARD DIE COMPONENTS

MAIN INDEX

EM24.50.001	EM24.50.400	EM24.50.400/G	EM24.50.400/G	EM24.52.100/J
	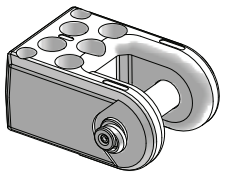		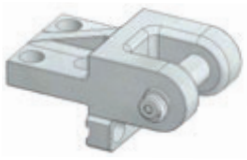	
Compliance system Federeinheit Gruppo molla	Lifting bracket with pin Tragwange mit Tragbolzen Staffa di sollevamento completa di perno	Lifting pin Tragbolzen mit Fallringsicherung Perno di sollevamento	Lifting bracket Tragwange Staffa di Sollevamento	Guide post Führungssäule Colonna
462	463	464	465	466

EM24.52.100/J	EM24.52.100/J	EM24.52.100/J	EM24.52.100/J	EM24.52.100/J
Afnor retaining ring Haltering Afnor Anello di tenuta Afnor	Retaining flange Sicherungsflansch Ritegno per colonna	Bush self-lubricating Führungsbuchse Boccola autolubrificante	Afnor toe clamp Afnor Haltestück Ritegno per boccola Afnor	Toe clamp for bush Haltestück für Buchse Ritegno per boccola
467	467	468	468	469

EM24.52.100/J	EM24.52.300/C	EM24.52.300/C	EM24.52.500/B	EM24.52.500/B
	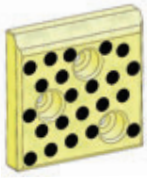			
Locating cone Kegeldistanz Cono di centraggio	Wear plate Afnor Gleitplatte Afnor Piastra guida Afnor	Wear plate Afnor Gleitplatte Afnor Piastra guida Afnor	Angular guide Winkelleiste Guida angolare	Slider Führungsleite Guida
469	470	471	472	472

EM24.55.100/G	EM24.55.100/G	EM24.55.100/G	EM24.59.500/K	EM24.59.500/K
				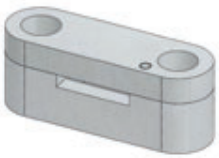
Retainer pin Steckbolzen Perno di arresto	Retainer pin Steckbolzen Perno di arresto	Shock absorber Halteelemente Ammortizzatore	Visual locator setting punch Endkontrollstempel Punzone di visualizzazione	Stamp retainer Halteplatte Portatimbri
473	473	474	474	475

EM24.59.500/K	EM24.59.500/K	EM24.59.500/K
Backing plate Druckplatte Distanziale	Stamp Buchstabenstempel Punzone marchio	Stamp Buchstabenstempel Punzone marchio
475	476	476

COMPLIANCE SYSTEM - FEDEREINHEIT - GRUPPO MOLLA

FORM A

FORM B

Notes

1 2 3 4 5

Material: 42CrMo4 + QT

6 Co-polymer **DUREL®**

7 Screw M5x16 - DIN 912

8 Nordlock

10 ...

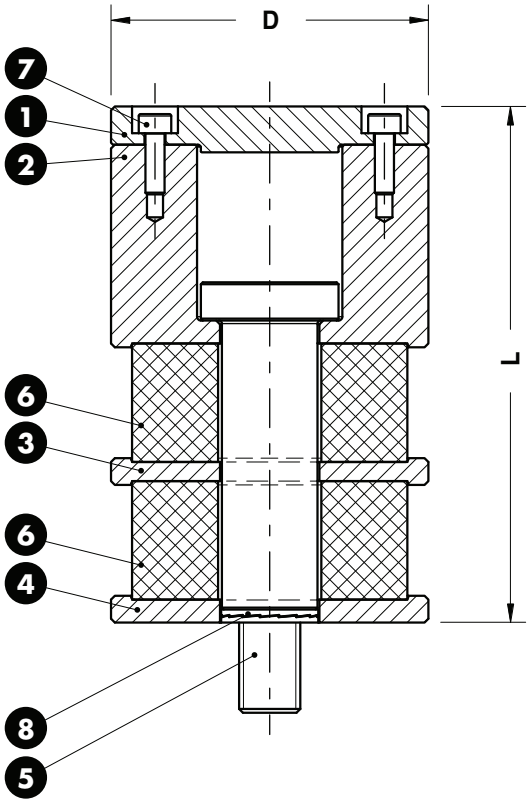

ORDER EXAMPLE

RENAULT CODE
R100 776 099

RENAULT CODE	D	L	FORM
R100 776 100	83	125	A
R100 776 099	83	135	B

LIFTING BRACKET WITH PIN AND LOCATING PINS
TRAGWANGE MIT TRAGBOLZEN UND ZENTRIERBOLZEN
STAFFA DI SOLLEVAMENTO COMPLETA DI PERNO E CENTRAGGI

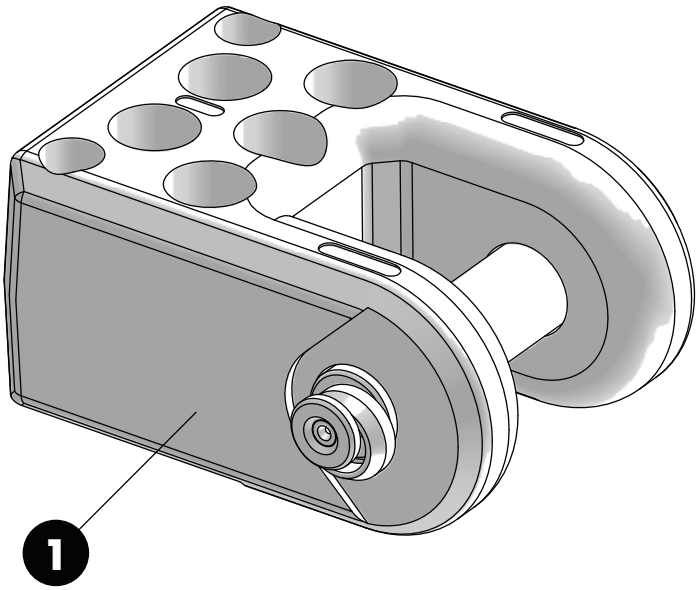

Respect the max load
Maximale Nutzlast beachten
Rispettare il carico Max

Screw the brackets on steel
(minimum quality Fe510 - S355)

Die Tragwangen auf Stahl
(mit Mindestqualität Fe510 - S355 verschrauben)

Avvitare le staffe su acciaio
(qualità minima Fe510 - S355)

WARNING - ACHTUNG - ATTENZIONE:

For safety reason, please consider always that the weight of the die has to be supported by just 2 lifting brackets.

Aus Sicherheitsgründen stets berücksichtigen, dass zwei Tragzapfens das gesamte Werkzeuggewicht tragen müssen.

Per ragioni di sicurezza, considerare sempre che il peso dello stampo deve essere sopportato da 2 sole staffe.

Notes

1. **Material:** St52
2. B02.30.
3. C11.20.2245 (2x)

Screws not included

STOCK

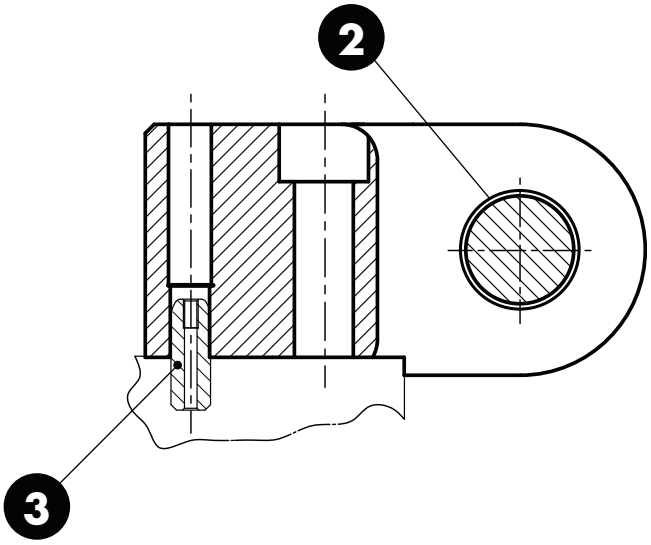

ORDER EXAMPLE

RENAULT CODE
R100 800 105

RENAULT CODE	Max load (kg)	Max die weight (kg)
R100 800 105	8000	16000
R100 800 108	12500	25000

EM24.50.400/G

OMCR

LIFTING PIN
TRAGBOLZEN MIT FALLRINGSICHERUNG
PERNO DI SOLLEVAMENTO

Respect the max load
Maximale Nutzlast beachten
Rispettare il carico Max

WARNING - ACHTUNG - ATTENZIONE:

For safety reason, please consider always that the weight of the die has to be supported by just 2 lifting pins.

Aus Sicherheitsgründen stets berücksichtigen, dass zwei Tragbolzen das gesamte Werkzeuggewicht tragen müssen.

Per ragioni di sicurezza, considerare sempre che il peso dello stampo deve essere sopportato da 2 soli perni.

Notes

Material: St52

CE STOCK

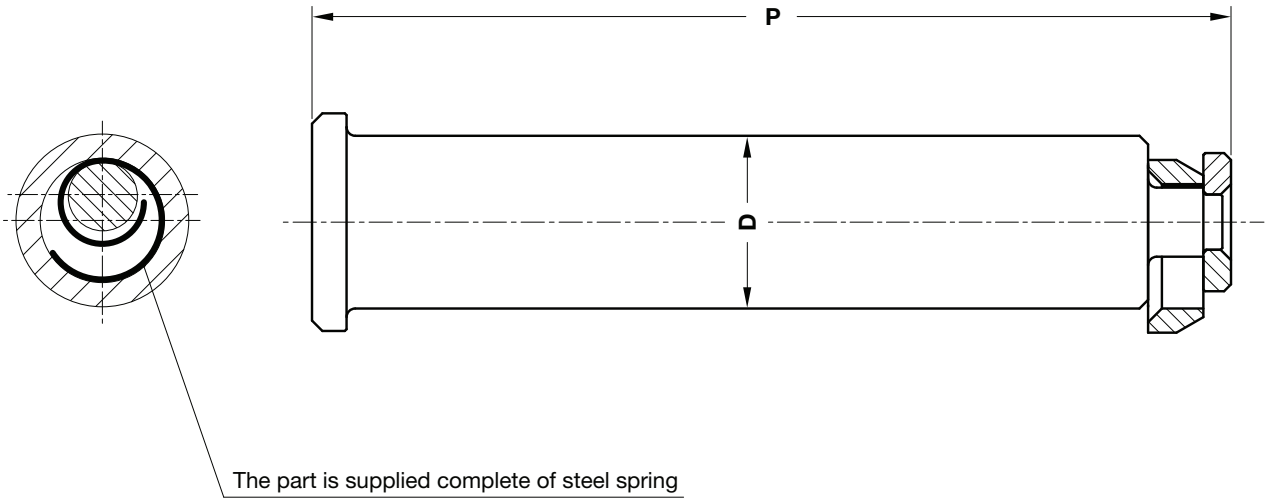

ORDER EXAMPLE

RENAULT CODE
R100 609 711

RENAULT CODE	Max load (kg)	Max die weight (kg)	P	D
R100 609 710	6000	12000	154	32
R100 609 711	9000	18000	197,75	40
R100 448 866	14000	28000	247,60	50
R100 609 712	22500	45000	309	63

OMCR

LIFTING BRACKET WITH PIN AND KEYS
TRAGWANGE MIT TRAGBOLZEN UND PASSFEDER
STAFFA DI SOLLEVAMENTO COMPLETA DI PERNO E CHIAVETTE

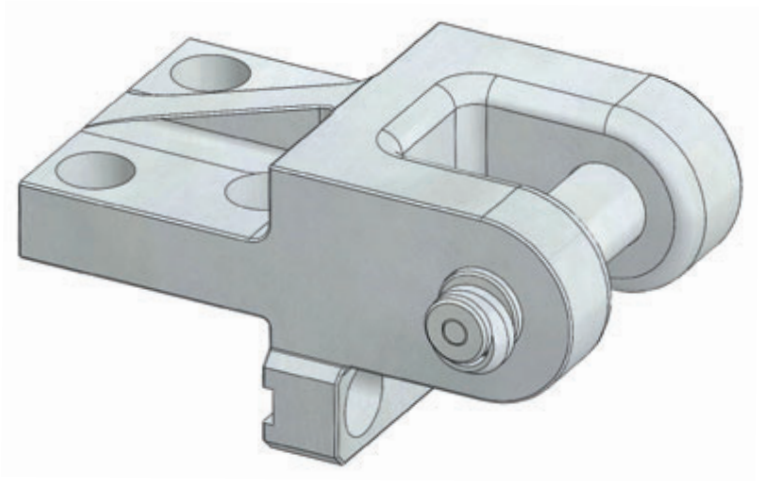

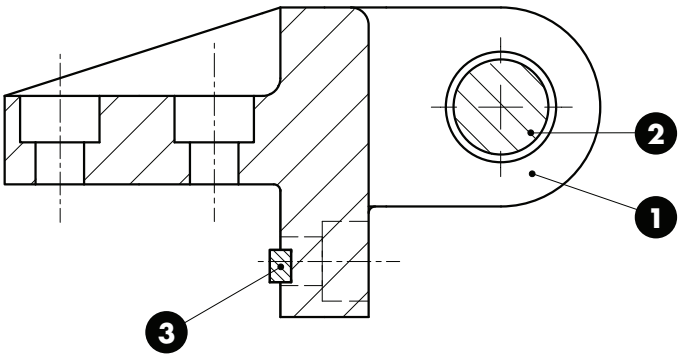

Respect the max. load
Maximale Nutzlast beachten
Rispettare il carico max.

WARNING -ACHTUNG - ATTENZIONE:

For safety reason, please consider always that the weight of the die has to be supported by just 2 lifting brackets.

Aus Sicherheitsgründen stets berücksichtigen, dass zwei Tragwangen das gesamte Werkzeuggewicht tragen müssen.

Per ragioni di sicurezza, considerare sempre che il peso dello stampo deve essere sopportato da 2 sole staffe.

Notes

1. **Material:** CK45 800÷1000 N/mm²
2. **Material:** St52
3. Key DIN 6885

Screws not included

CE STOCK

ORDER EXAMPLE	RENAULT CODE
	P953 548 070

RENAULT CODE	Max load (kg)	Max die weight (kg)
P953 548 270	4000	8000
P953 549 070	6300	12600

EM24.52.100/J

OMCR

GUIDE POST - FÜHRUNGSSÄULE - COLONNA

Notes

1. **Material:** 16MnCr5 - **HRC:** 60÷62
2. EM24.52.100/J

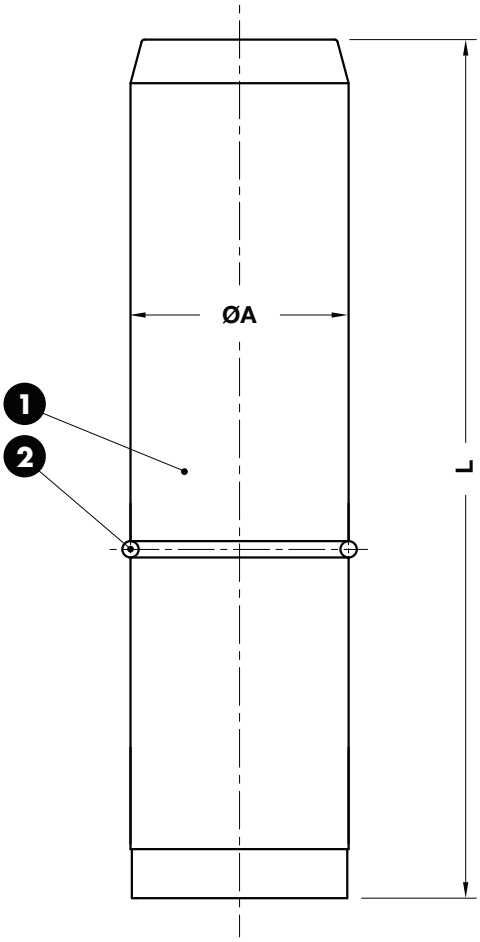

ORDER EXAMPLE	RENAULT CODE
	P446 116 817

RENAULT CODE	A	L	RENAULT CODE	A	L
R100 018 363	25	125	P446 118 707	63	280
P446 116 817	32	140	P446 118 702	63	315
P446 116 815	32	160	P446 119 200	80	315
P446 116 816	32	200	P446 119 201	80	355
P446 118 100	50	224	R100 221 692	80	400
P446 118 101	50	280	P446 119 800	100	400
P446 118 701	63	250	P446 119 801	100	450

EM24.52.100/J

OMCR

AFNOR RETAINING RING - HALTERING AFNOR - ANELLO DI TENUTA AFNOR

Notes

Material: St37

STOCK

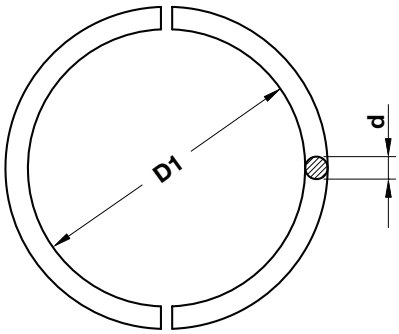

ORDER EXAMPLE

RENAULT CODE
P446 180 200

RENAULT CODE	For guide post Ø	D1	d
P446 180 200	25	22,5	2.5
P446 180 300	32	28	4
P446 180 400	40	36	4
P446 180 500	50	46	4
P446 180 600	63	57	6
P446 180 700	80	74	6
P446 180 800	100	94	6

Standard Renault

EM24.52.100/J

OMCR

AFNOR RETAINING FLANGE - SPANNFLANSCH AFNOR - RITEGNO PER COLONNA AFNOR

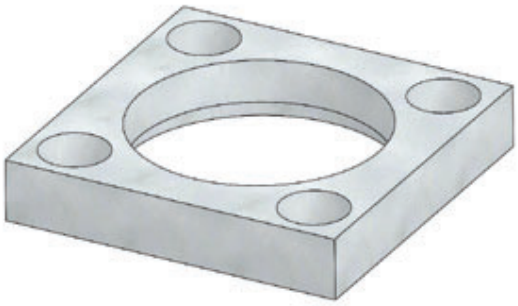

Notes

Material: CK45

STOCK

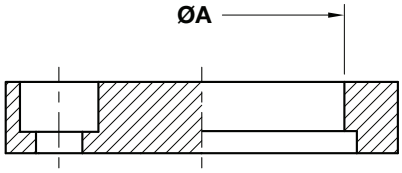

ORDER EXAMPLE

RENAULT CODE
P483 784 100

RENAULT CODE	A
P483 784 100	25
P483 784 600	32
P483 795 100	40
P483 795 401	50
P483 795 801	63
P483 796 001	80
P483 796 401	100

EM24.52.100/J

OMCR

AFNOR BUSH SELF-LUBRICATING
AFNOR FÜHRUNGSBUCHSE
BOCCOLA AUTOLUBRIFICANTE AFNOR

Notes

Material: Bronze + Graphite
HB > 190

STOCK

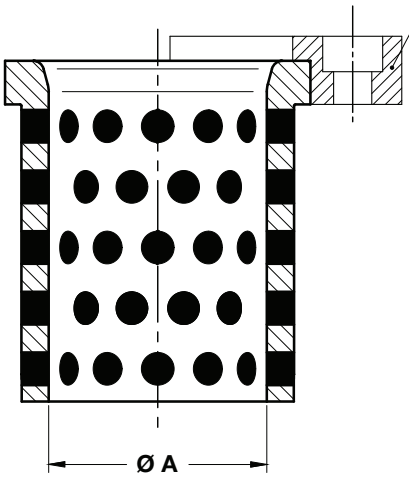

ORDER EXAMPLE

RENAULT CODE
M764 544 501

RENAULT CODE	A
M764 539 401	40
M764 544 501	50
M764 549 501	63
M764 554 601	80
X345 298 500	100

EM24.52.100/J

OMCR

AFNOR TOE CLAMP - AFNOR HALTESTÜCK - RITEGNO PER BOCCOLA AFNOR

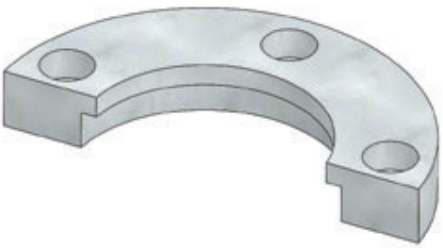

Notes

Material: CK45

STOCK

Application example

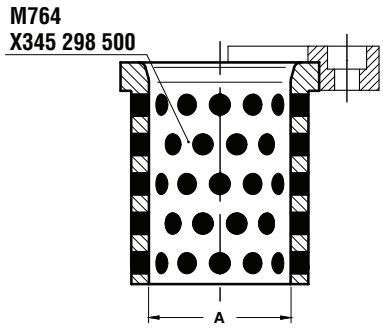

ORDER EXAMPLE

RENAULT CODE
M321 534 500

RENAULT CODE	A	RENAULT CODE	A
M321 534 500	25	M321 556 601	63
M321 544 501	32	M321 560 601	80
M321 548 501	40	M321 562 700	100
M321 552 601	50		

EM24.52.100/J

OMCR

TOE CLAMP FOR BUSH - HALTESTÜCK FÜR BUCHSE - RITEGNO PER BOCCOLA

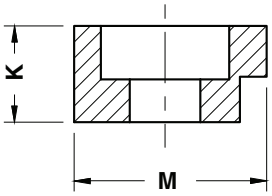

Notes

Material: CK45

STOCK

ORDER EXAMPLE

RENAULT CODE
R100 171 995

RENAULT CODE	K	M
R100 171 981	12	18
R100 171 995	16	22
R100 171 998	20	26
R100 172 000	25	26
R100 172 001	32	26

Standard Renault

EM24.52.100/J

OMCR

LOCATING CONE - KEGELDISTANZ - CONO DI CENTRAGGIO

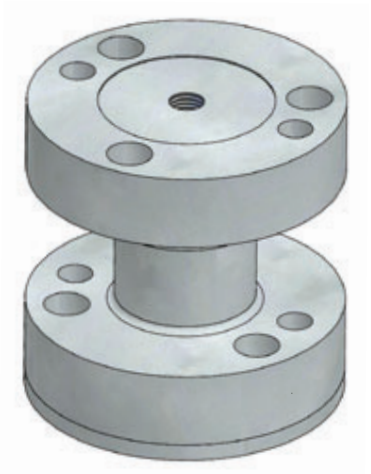

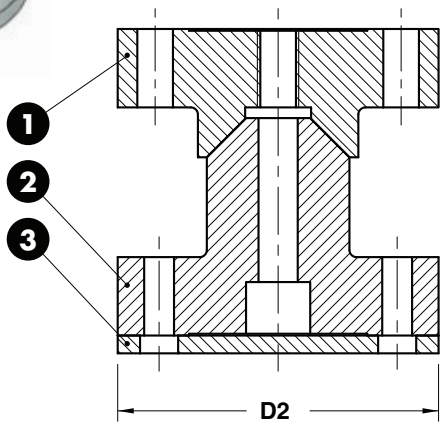

Notes

1 2

Material: X155CrMo12 - **HRC:** 58÷60

3 **Material:** 36CrNiMo4

STOCK

ORDER EXAMPLE

RENAULT CODE
R901 138 223

RENAULT CODE	D2
R901 138 222	90
R901 138 223	110

OMCR

WEAR PLATE SELF-LUBRICATING AFNOR
GLEITPLATTE BRONZE MIT FESTSCHMIERSTOFF AFNOR
PIASTRA GUIDA AUTOLUBRIFICANTE AFNOR

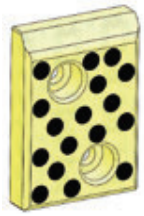

FORM A

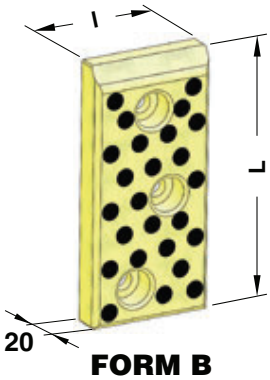

FORM B

Notes

Material: Bronze + Graphite
HB > 190

STOCK

FORM C

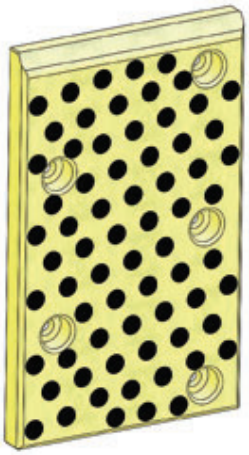

FORM E

FORM F

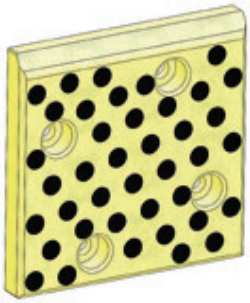

FORM D

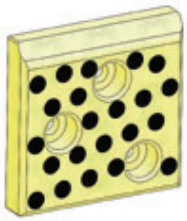

FORM G

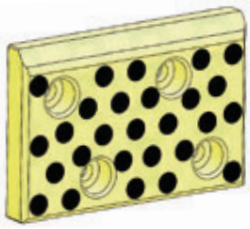

FORM H

ORDER EXAMPLE

RENAULT CODE
R100 092 844

RENAULT CODE	I	L	FORM
R100 092 843	70	100	A
R100 092 844	70	150	B
R100 092 845	70	200	C
R100 092 846	100	100	G
R100 092 883	100	150	D
R100 092 884	100	200	C
R100 092 885	100	250	E

RENAULT CODE	I	L	FORM
R100 092 886	100	300	F
R100 092 887	150	100	H
R100 092 888	150	150	D
R100 092 890	150	200	C
R100 092 893	150	250	E
R100 092 894	150	300	F
R100 092 895	200	100	H

OMCR

WEAR PLATE STEEL AFNOR
GLEITPLATTE STAHL AFNOR
PIASTRA GUIDA IN ACCIAIO AFNOR

FORM A

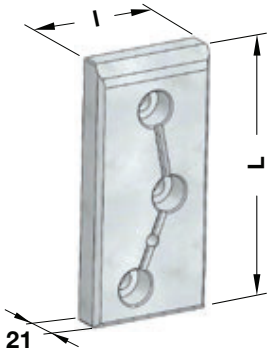

FORM B

Notes

Material: 16MnCr5
HRC: 58÷60

STOCK

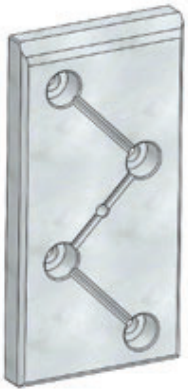

FORM C

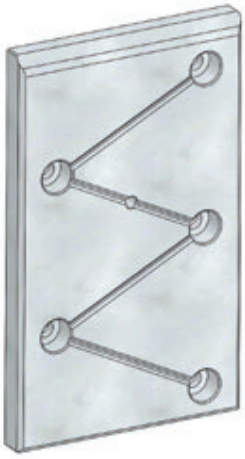

FORM E

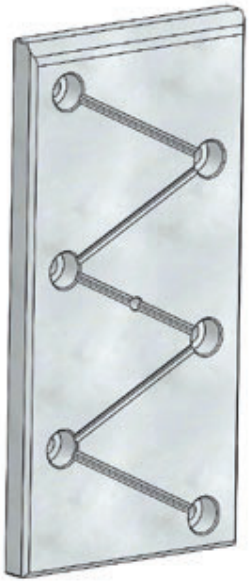

FORM F

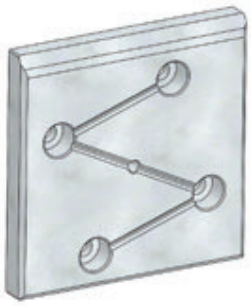

FORM D

FORM G

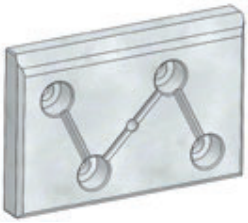

FORM H

ORDER EXAMPLE

RENAULT CODE
P446 626 558

RENAULT CODE	I	L	FORM
P446 625 854	70	100	A
P446 626 558	70	150	B
P446 627 059	70	200	C
P446 625 855	100	100	G
P446 626 559	100	150	D
P446 627 060	100	200	C
P446 627 454	100	250	E

RENAULT CODE	I	L	FORM
P446 627 754	100	300	F
P446 626 560	150	100	H
P446 626 561	150	150	D
P446 627 061	150	200	C
P446 627 455	150	250	E
P446 627 755	150	300	F
P446 627 062	200	100	H

EM24.52.500/B

OMCR

ANGULAR GUIDE - WINKELLEISTE - GUIDA ANGOLARE

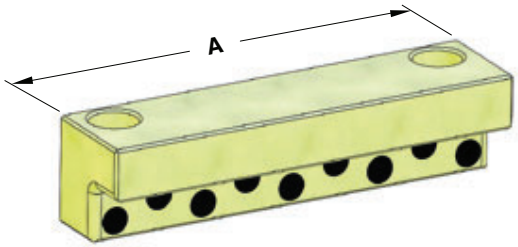

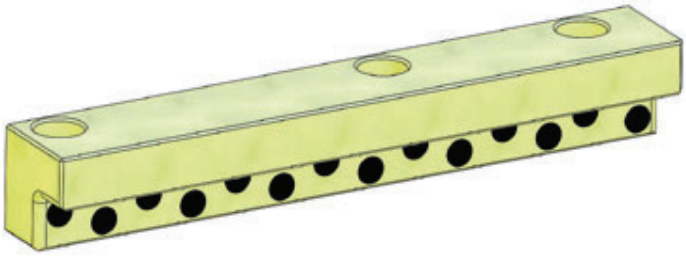

Notes

Material: Bronze + Graphite
HB > 190

STOCK

ORDER EXAMPLE

RENAULT CODE
M764 523 701

RENAULT CODE	A
M764 523 701	250
M764 523 702	160

EM24.52.500/B

OMCR

SLIDER - FÜHRUNGSLEISTE - GUIDA

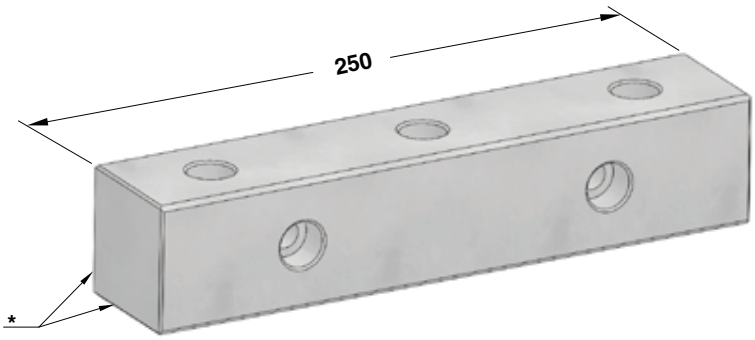

Notes

Material: 16MnCr5
HRC: 60÷62

10

ORDER EXAMPLE

RENAULT CODE
A07.20.50250

RENAULT CODE
A07.20.50250

* Sides to rework during adjusting
Anpassung der Flächen zur Abstimmung
Lati da rilavorare in adattamento

EM24.55.100/G

OMCR

RETAINER PIN - STECKBOLZEN - PERNO DI ARRESTO

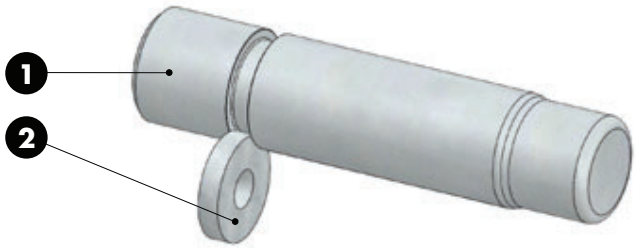

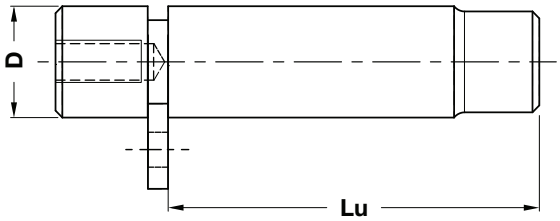

Notes

1 2 **Material:** CK45

STOCK

ORDER EXAMPLE

RENAULT CODE
R100 306 190

RENAULT CODE	D	Lu	RENAULT CODE	D	Lu	RENAULT CODE	D	Lu
R100 306 188	20	81	R100 306 198	32	148	R100 306 209	50	220
R100 306 190	25	81	R100 306 201	40	132	R100 306 210	63	210
R100 306 191	25	98	R100 306 204	40	192	R100 306 213	63	250
R100 306 194	32	103	R100 306 207	50	165	R100 357 232	80	210

Standard Renault

EM24.55.100/G

OMCR

RETAINER PIN - STECKBOLZEN - PERNO DI ARRESTO

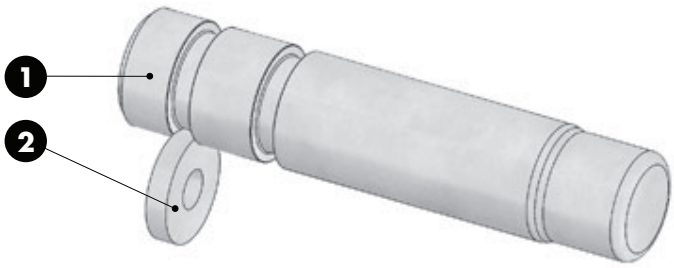

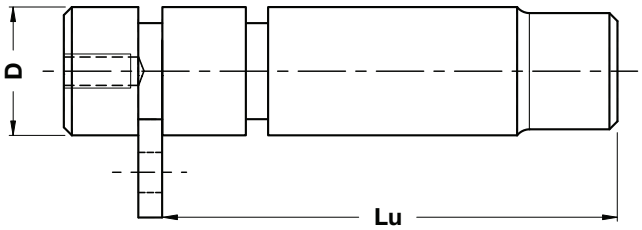

Notes

1 2 **Material:** CK45

STOCK

ORDER EXAMPLE

RENAULT CODE
R100 306 217

RENAULT CODE	D	Lu	RENAULT CODE	D	Lu	RENAULT CODE	D	Lu
R100 306 215	25	81	R100 306 220	40	132	R100 306 226	63	210
R100 306 217	25	98	R100 306 221	40	192	R100 306 227	63	250
R100 306 218	32	103	R100 306 223	50	165			
R100 306 219	32	148	R100 306 225	50	220			

EM24.55.100/G

OMCR

SHOCK ABSORBER - HALTEELEMENTE - AMMORTIZZATORE

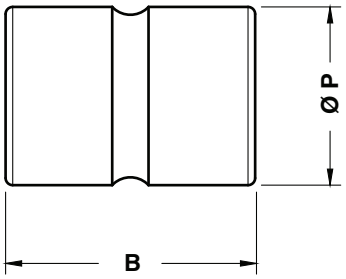

Without silicone
Ohne silicon
Senza silicone

Notes

Material: Elastomer 92SH

STOCK

ORDER EXAMPLE

RENAULT CODE
X346 566 801

RENAULT CODE	B	P
X346 566 000	45	25
X346 566 801	50	32
X346 567 400	60	40
X346 568 100	70	50
X346 568 700	80	63
X346 569 201	90	80

EM24.59.500/K

OMCR

VISUAL LOCATOR SETTING PUNCH - ENDKONTROLLSTEMPEL - PUNZONE DI VISUALIZZAZIONE

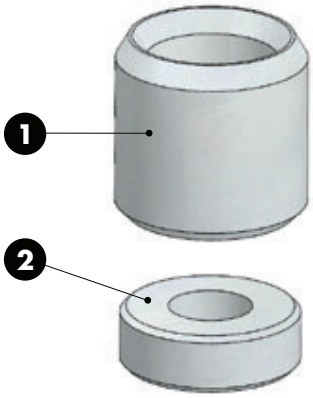

Notes

1. **Material:** X205Cr12KU
   HRC: 60÷62
2. **Material:** CK45

STOCK

ORDER EXAMPLE

RENAULT CODE
P785 283 005

RENAULT CODE
P785 283 005

EM24.59.500/K

OMCR

STAMP RETAINER - HALTEPLATTE - PORTATIMBRI

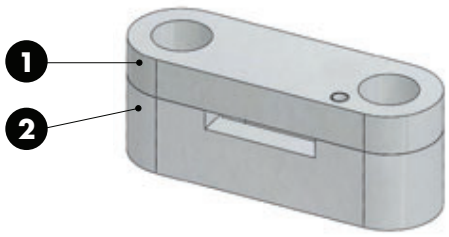

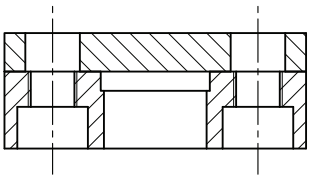

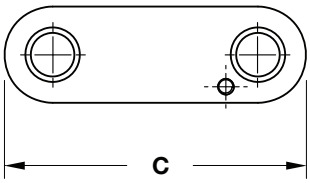

Notes

1 2 **Material:** CK45

STOCK ...

ORDER EXAMPLE

RENAULT CODE
R100 197 803

RENAULT CODE	C	N° of punch
R100 050 232	47	4
R100 197 803	55	6
R100 050 234	63	8
R100 352 214	71	10

Standard Renault

EM24.59.500/K

OMCR

BACKING PLATE - DRUCK PLATTE - DISTANZIALE

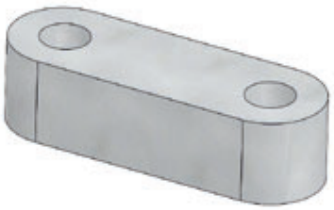

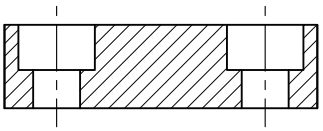

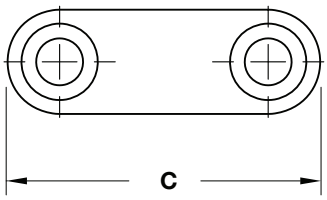

Notes

Material: CK45

STOCK

ORDER EXAMPLE

RENAULT CODE
R100 197 805

RENAULT CODE	C	N° of punch
R100 050 235	47	4
R100 197 805	56	6
R100 050 236	63	8
R100 352 230	71	10

EM24.59.500/K

OMCR

STAMP - BUCHSTABENSTEMPEL - PUNZONE MARCHIO

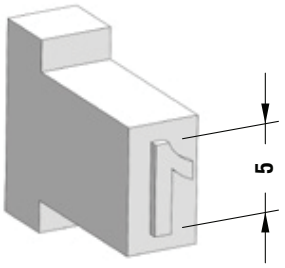

Notes

Material: X153CrMoV12
HRC: 54÷56

STOCK

ORDER EXAMPLE

RENAULT CODE
P785 150 102

RENAULT CODE	Stamp	RENAULT CODE	Stamp	RENAULT CODE	Stamp	RENAULT CODE	Stamp
P785 150 002	0	P785 289 002	Spacer	P785 152 202	J	P785 153 102	S
P785 150 102	1	P785 151 302	A	P785 152 302	K	P785 153 202	T
P785 150 202	2	P785 151 402	B	P785 152 402	L	P785 153 302	U
P785 150 302	3	P785 151 502	C	P785 152 503	M	P785 153 402	V
P785 150 402	4	P785 151 602	D	P785 152 602	N	P785 153 502	W
P785 150 502	5	P785 151 702	E	P785 150 002	O	P785 153 602	X
P785 150 602	6 or 9	P785 151 802	F	P785 152 802	P	P785 153 702	Y
P785 150 702	7	P785 151 902	G	P785 152 902	Q	P785 153 802	Z
P785 150 802	8	P785 152 002	H	P785 153 002	R		

EM24.59.500/K

OMCR

STAMP - BUCHSTABENSTEMPEL - PUNZONE MARCHIO

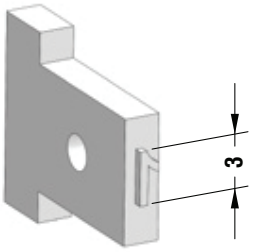

Notes

Material: X153CrMoV12
HRC: 54÷56

STOCK

ORDER EXAMPLE

RENAULT CODE
P785 154 103

RENAULT CODE	Stamp	RENAULT CODE	Stamp	RENAULT CODE	Stamp	RENAULT CODE	Stamp
P785 154 003	0	P785 155 003	Spacer	P785 155 308	J	P785 140 952	S
P785 154 103	1	P785 155 300	A	P785 155 309	K	P785 140 953	T
P785 154 203	2	P785 155 301	B	P785 155 310	L	P785 140 954	U
P785 154 303	3	P785 155 302	C	P785 155 311	M	P785 140 955	V
P785 154 403	4	P785 155 303	D	P785 155 312	N	P785 140 956	W
P785 154 503	5	P785 155 304	E	P785 155 313	O	P785 140 957	X
P785 154 603	6 or 9	P785 155 305	F	P785 155 314	P	P785 140 958	Y
P785 154 703	7	P785 155 306	G	P785 140 950	Q	P785 140 959	Z
P785 154 803	8	P785 155 307	H	P785 140 951	R		