MOELLER PRECISION TOOL

TRUE-SET RETAINERS

TRUE STRIP

DURA PUNCH

M-CAD DESIGN

CERTIFIED ISO 9001:2008

The World's Only True One-Piece Construction Ball Lock Retainer

STANDARD - TRUE-SET SHOULDER AND BALL LOCK RETAINERS

SPECIAL - BUILT-TO-SPECIFICATION MULTI-HOLE RETAINERS

STANDARD RETAINERS

TRUE-SET

Moeller Manufacturing's exclusive and innovative, true one piece construction retainer was developed using intensive market research and user input. True-Set retainers are the only products manufactured from a through hardened single piece of high alloy tool steel. The design eliminates stacking tolerance errors, allowing better punch positioning and the integrated design provides an end to the aggravation of lost plugs, or the separation of welded backing plates. True-Set retainers disperse the stamping force over the entire retainer surface, protecting die shoes. The retainers are built to Automotive, NAPMA and NAAMS specifications and are completely interchangeable with all competing brands. The universal design, with in-line dowel and no-charge ground in position offset dowel, facilitates easy CAD-CAM design and assembly. Quality is maintained by using the latest technology, manufacturing and inspection equipment, including statistical process control (S.P.C.). Simplification of design and high tech equipment, combined with the "Kaizen" approach of lean manufacturing, provides the economics to allow Moeller Manufacturing to make these products available at current or below current market prices. Moeller Manufacturing's innovative True Set Retainer products are the strongest, most accurate, most affordable and user friendly available in the industry today. Order your True-Set products with confidence, they are "100% Customer Satisfaction" guaranteed.

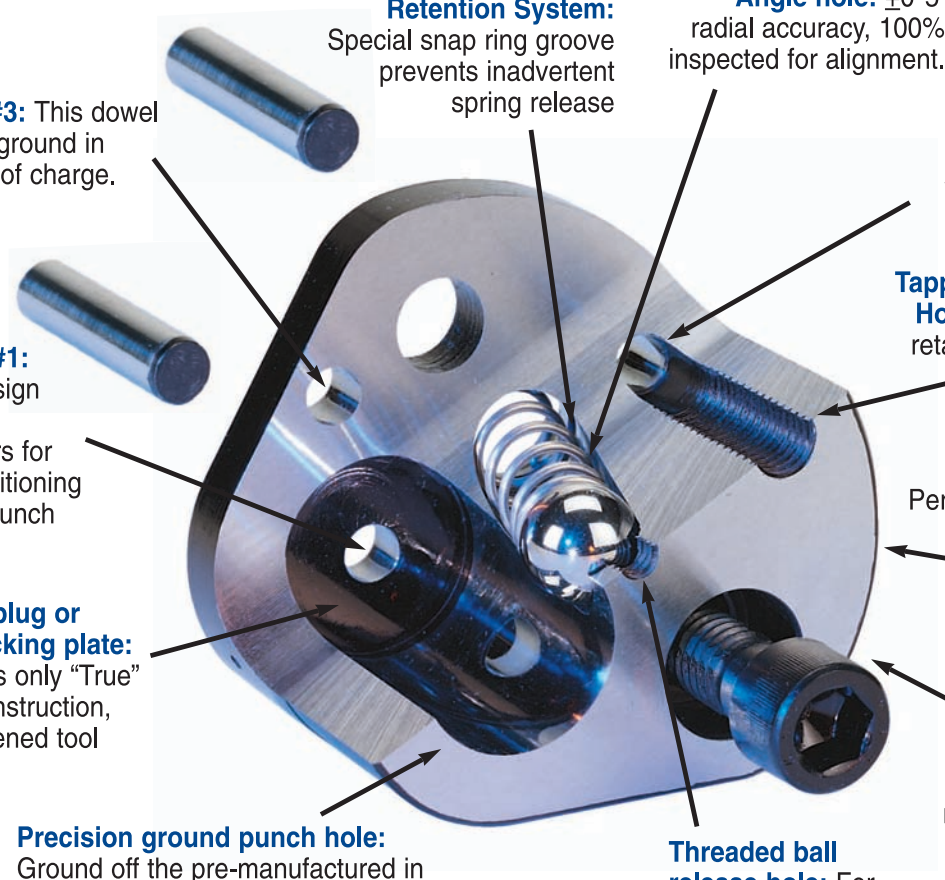

GENERAL

- Interchangeable with all in line dowel brands.
- Available in both light and heavy duty, inch and metric sizes.
- Fully stocked for off shelf, same day delivery.
- Customer satisfaction is 100% guaranteed.

MULTI-HOLE RETAINERS

TRUE-SET

Moeller Manufacturing's patented True-Set multi hole retainer provides an innovative, low cost solution in building dies. They reduce die assembly time and allow for closer spacing of punches. The retainers are manufactured from a single piece of high alloy tool steel which is through hardened and ground for accuracy and long life. The simplified design eliminates troublesome backing plates, backing plugs and offers improved delivery and price.

TYPICAL MULTI HOLE RETAINERS

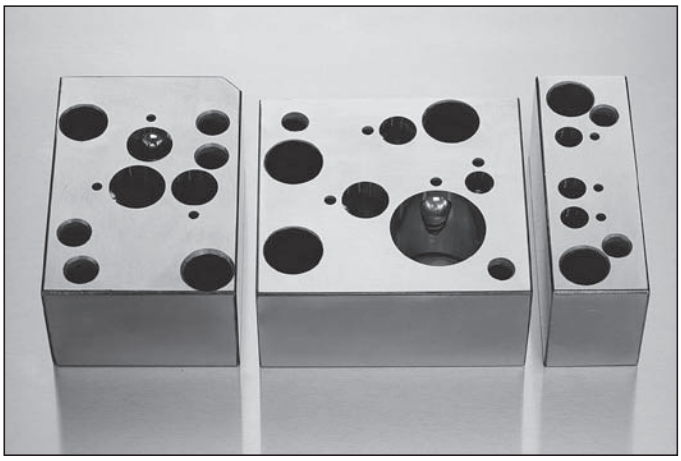

DETAIL VIEW OF PUNCH HOLE

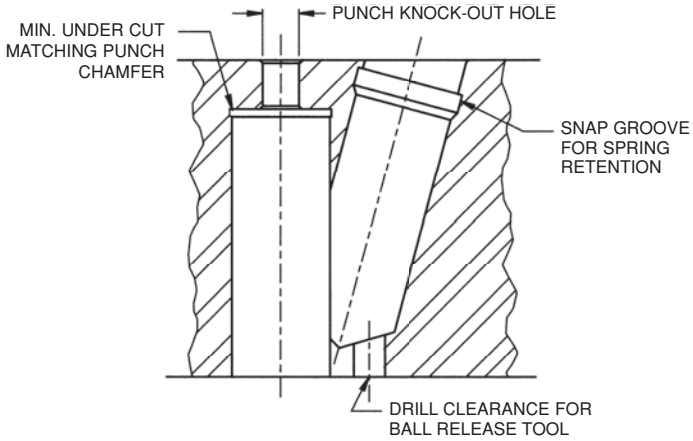

GENERAL

- Unique design provides a 15-30% savings over backing plate styles, and reduces lead time.
- Available in both light and heavy duty, inch and metric sizes.
- Interchangeable with all competing brands, and 100% customer satisfaction guaranteed.

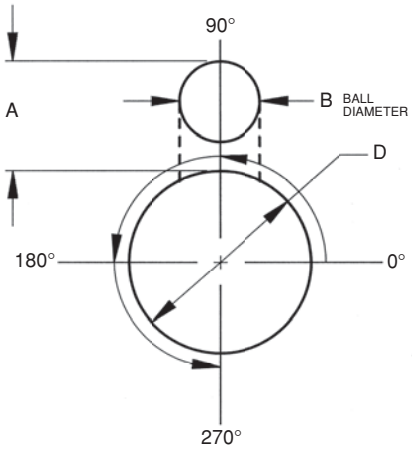

Specify radial location in degrees counterclockwise from 0°.

Punch Shape	Ball Hole Class	Radial Tolerance
Round	R	±5°
Shape	F	±0°5'

Class R provided unless otherwise specified.

SPACE REQUIREMENTS - INCH				SPACE REQUIREMENTS - METRIC			
CATALOG NUMBER	D	A	B	CATALOG NUMBER	D	A	B
IRL	.250	.44	.250	MRL	6	12	6
	.375	.44	.250		10	13	8
	.500	.50	.312		13	13	8
	.625	.50	.312		16	13	8
	.750	.56	.375		20	13	8
	.875	.56	.375		25	13	8
	1.000	.56	.375		—	—	—
	1.250	.56	.375		—	—	—
IRH	.375	.56	.375	MRH	10	15	10
	.500	.69	.500		13	17	12
	.625	.69	.500		16	17	12
	.750	.69	.500		20	17	12
	.875	.69	.500		25	17	12
	1.000	.69	.500		32	17	12
	1.250	.69	.500		40	17	12

STANDARD TOLERANCES	INCH	METRIC
OUTSIDE EDGES	±.020	±.50mm
DOWEL HOLE LOCATIONS	±.0005	±.01mm
SCREW HOLE LOCATIONS	±.005	±.10mm
COMPONENT HOLE LOCATIONS	±.0005	±.01mm

MANUFACTURED UNDER PATENT NO.'S 0351395, 5357835 INTERNATIONAL PATENTS PENDING

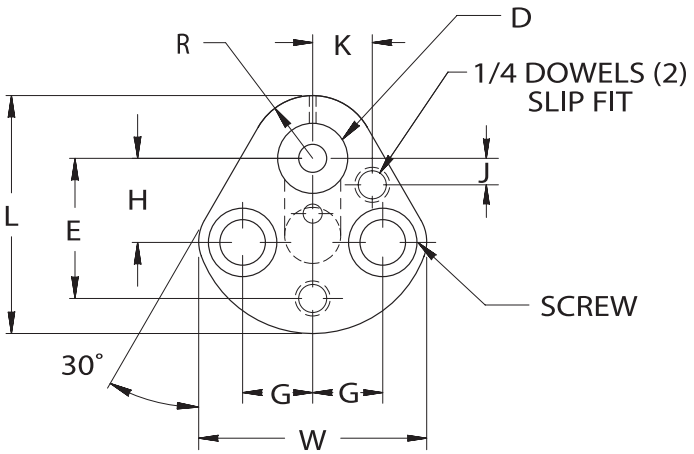

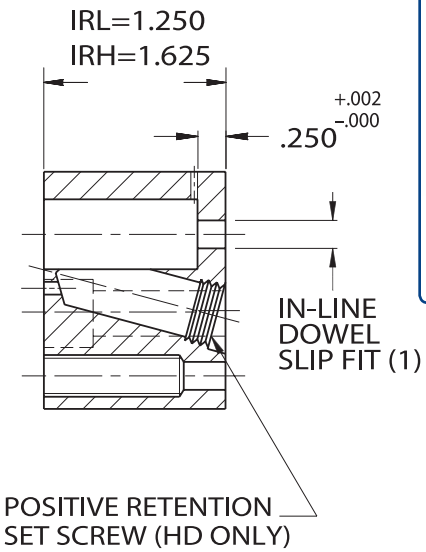

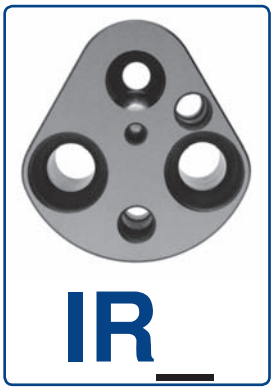

FOR ACCESSORIES
AND SHIM PLATES
SEE PAGES 14-15.

Manufactured under Patent No.'s 0351395, 5357835
International Patents Pending.

HEAVY DUTY

Complete design & CAD files visit WWW.MOELLERMCAD.COM

CATALOG NUMBER	D DIA.	L	W	R	H	±.0004 J	±.0004 K	G	±.0004 E	IN-LINE DOWEL	SCREW SIZE
IRH 37	.375	1.75	1.57	.38	.750	.2953	.3543	.438	1.060	.1875	5/16-18
IRH 50	.500	2.00	1.90	.50	.750	.2559	.4724	.562	1.180	.2500	3/8-16
IRH 62	.625	2.12	2.03	.56	.750	.2362	.5315	.625	1.250	.2500	3/8-16
IRH 75	.750	2.37	2.29	.69	.750	.1969	.6496	.688	1.320	.2500	3/8-16
IRH 87	.875	2.50	2.42	.75	.750	.1969	.7283	.688	1.400	.2500	3/8-16
IRH 100	1.000	2.75	2.62	.88	.938	.2756	.8661	.781	1.600	.2500	1/2-13
IRH 125	1.250	2.75	2.62	.88	.938	.2756	.8661	.781	1.600	.2500	1/2-13

LIGHT DUTY

Complete design & CAD files visit WWW.MOELLERMCAD.COM

CATALOG NUMBER	D DIA.	L	W	R	H	±.0004 J	±.0004 K	G	±.0004 E	IN-LINE DOWEL	SCREW SIZE
IRL 25	.250	1.75	1.57	.38	.750	.2953	.3543	.438	1.060	.1250	5/16-18
IRL 37	.375	1.75	1.57	.38	.750	.2953	.3543	.438	1.060	.1875	5/16-18
IRL 50	.500	2.00	1.90	.50	.750	.2559	.4724	.562	1.180	.2500	3/8-16
IRL 62	.625	2.12	2.03	.56	.750	.2362	.5315	.625	1.250	.2500	3/8-16
IRL 75	.750	2.37	2.29	.69	.750	.1969	.6496	.688	1.320	.2500	3/8-16
IRL 87	.875	2.50	2.42	.75	.750	.1969	.7283	.688	1.400	.2500	3/8-16
IRL 100	1.000	2.75	2.62	.88	.938	.2756	.8661	.781	1.600	.2500	1/2-13
IRL 125	1.250	2.75	2.62	.88	.938	.2756	.8661	.781	1.600	.2500	1/2-13

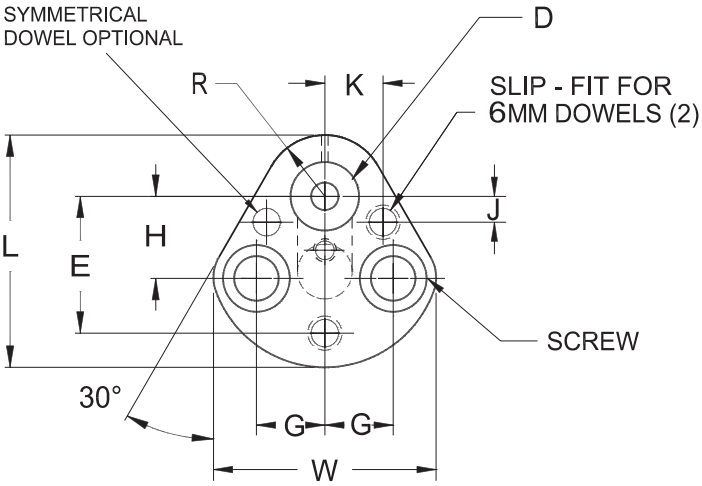

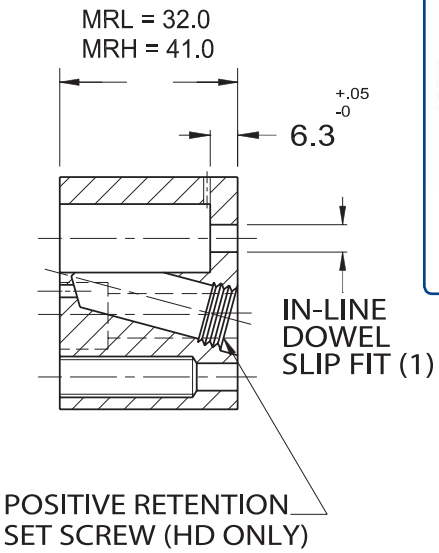

FOR ACCESSORIES
AND SHIM PLATES
SEE PAGES 14-15.

Manufactured under Patent No.'s 0351395, 5357835
International Patents Pending.

HEAVY DUTY

Complete design & CAD files visit WWW.MOELLERMCAD.COM

CATALOG NUMBER	D DIA.	±.01 E	G	L	W	R	H	±.01 J	±.01 K	IN-LINE DOWEL	SCREW SIZE
MRH 10	10	26.924	11.12	44.5	39.9	9.5	19.05	7.50	9.00	6	M8
MRH 13	13	29.972	14.27	50.8	48.3	12.7	19.05	6.50	12.00	6	M8
MRH 16	16	31.750	15.87	54.0	51.6	14.3	19.05	6.00	13.50	6	M8
MRH 20	20	33.528	17.47	60.3	58.2	17.5	19.05	5.00	16.50	6	M10
MRH 25	25	40.640	19.84	69.9	66.5	22.2	23.82	7.00	22.00	6	M12
MRH 32	32	40.640	19.84	69.9	66.5	22.2	23.82	7.00	22.00	6	M12
MRH 40	40	43.993	24.00	77.4	77.8	26.0	27.00	10.00	26.00	6	M12

LIGHT DUTY

Complete design & CAD files visit WWW.MOELLERMCAD.COM

CATALOG NUMBER	D DIA.	±.01 E	G	L	W	R	H	±.01 J	±.01 K	IN-LINE DOWEL	SCREW SIZE
MRL 06	06	23.000	11.10	41.3	37.8	8.0	19.00	9.00	8.00	3	M6
MRL 10	10	26.924	11.12	44.5	39.9	9.5	19.05	7.50	9.00	6	M8
MRL 13	13	29.972	14.27	50.8	48.3	12.7	19.05	6.50	12.00	6	M8
MRL 16	16	31.750	15.87	54.0	51.6	14.3	19.05	6.00	13.50	6	M8
MRL 20	20	33.528	17.47	60.3	58.2	17.5	19.05	5.00	16.50	6	M10
MRL 25	25	40.640	19.84	69.9	66.5	22.2	23.82	7.00	22.00	6	M12

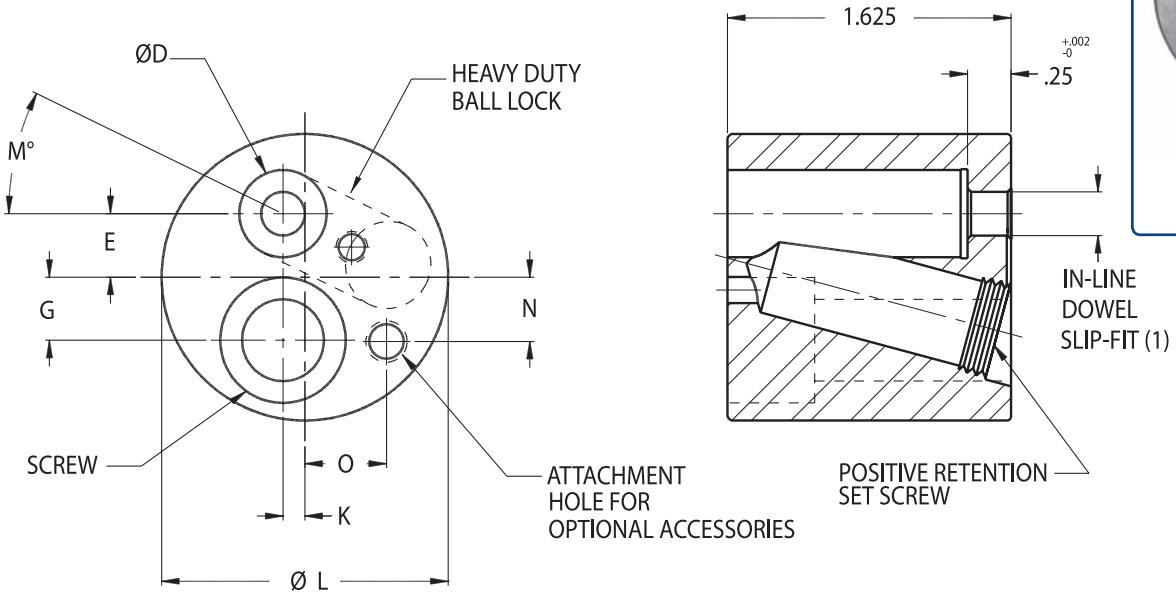

FOR ACCESSORIES
AND SHIM PLATES
SEE PAGES 14-15.

Complete design & CAD files visit WWW.MOELLERMCAD.COM

CATALOG NUMBER	ØD	ØL	E	G	±.25° M	K	SCREW SIZE	IN-LINE DOWEL
IRR 37	.375	1.50	.389	.280	20.5°	.104	7/16-14	.1875
IRR 50	.500	1.63	.364	.361	26°	.125	7/16-14	.2500
IRR 62	.625	1.75	.358	.436	33.5°	.076	7/16-14	.2500
IRR 75	.750	2.25	.480	.563	30°	0	5/8-11	.2500
IRR 87	.875	2.38	.484	.626	30°	0	5/8-11	.2500
IRR 100	1.000	2.50	.492	.689	30°	0	5/8-11	.2500
IRR 125	1.250	3.00	.617	.820	30°	0	3/4-10	.2500

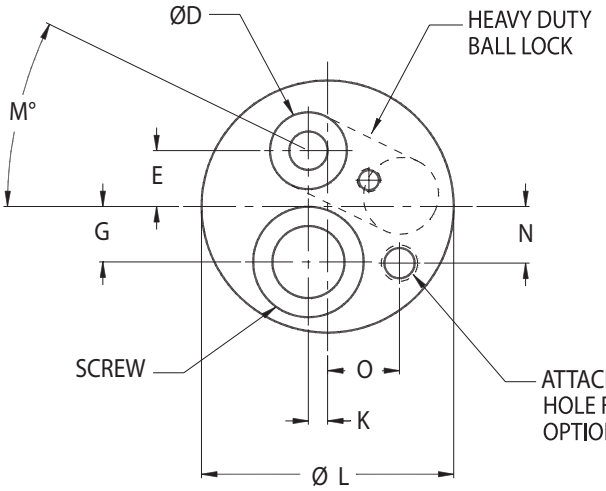

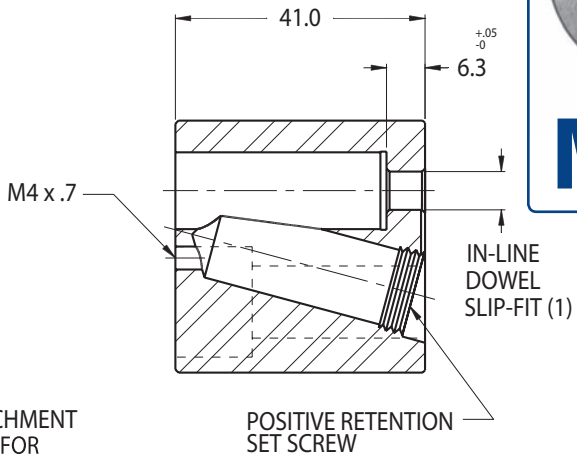

FOR ACCESSORIES
AND SHIM PLATES
SEE PAGES 14-15.

International Patents Pending.

Complete design & CAD files visit WWW.MOELLERMCAD.COM

CATALOG NUMBER	ØD	ØL	E	G	K	M	N	O	SCREW SIZE	IN-LINE DOWEL	ATTACHMENT HOLE
MRR 10	10.00	38.1	9.86	7.10	2.65	20.5˚	4.47	12.72	M12	6	M6 x 1.0
MRR 13	13.00	41.3	9.25	9.17	3.18	26˚	9.35	11.88	M12	6	M6 x 1.0
MRR 16	16.00	44.5	9.10	11.07	1.93	33.5˚	10.21	13.16	M12	6	M6 x 1.0
MRR 20	20.00	57.2	12.20	14.30	0	30˚	9.35	19.40	M16	6	M8 x 1.25
MRR 25	25.00	63.5	12.51	17.50	0	30˚	14.27	20.17	M16	6	M8 x 1.25
MRR 32	32.00	76.2	15.67	20.83	0	30˚	15.46	26.12	M20	6	M8 x 1.25
MRR 40	40.00	82.6	15.39	23.55	0	30˚	15.46	26.12	M20	6	M8 x 1.25

IRN STYLE
For Round Punches

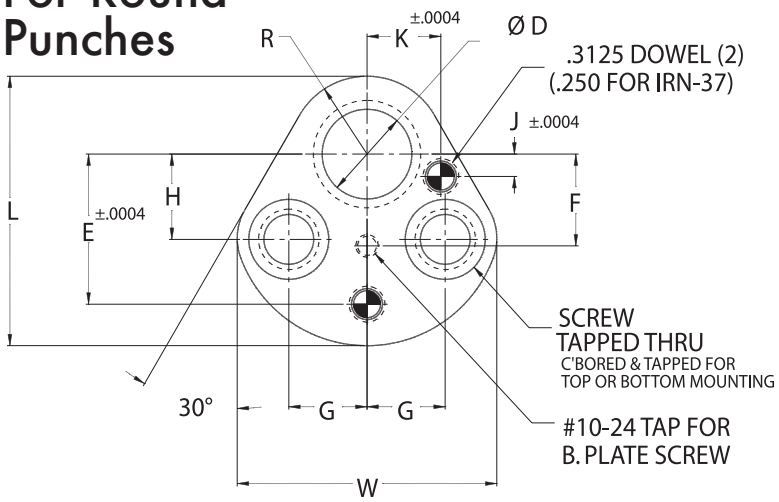

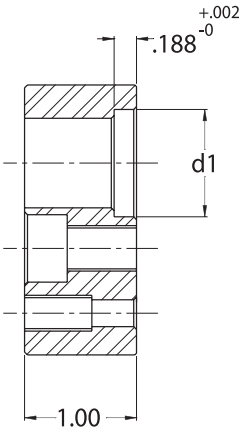

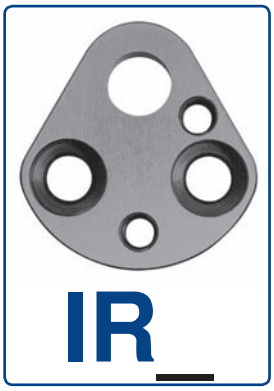

FOR ACCESSORIES
AND BACKING PLATES
SEE PAGES 14-15.

Complete design & CAD files visit WWW.MOELLERMCAD.COM

CATALOG NUMBER	D	d1	L	W	R	H	±.0004 J	±.0004 K	G	±.0004 E	F	SCREW SIZE	TAP
IRN 37	.375	.53	1.75	1.57	.38	.75	.2953	.3543	.438	1.060	.63	5/16-18	3/8-16
IRN 50	.500	.66	2.00	1.90	.50	.75	.2559	.4724	.562	1.180	.63	5/16-18	3/8-16
IRN 62	.625	.78	2.12	2.03	.56	.75	.2362	.5315	.625	1.250	.63	5/16-18	3/8-16
IRN 75	.750	.91	2.37	2.29	.69	.75	.1968	.6496	.688	1.320	.91	5/16-18	3/8-16
IRN 100	1.000	1.18	2.75	2.62	.88	.94	.2756	.8661	.781	1.600	1.18	1/2-13	5/8-11
IRN 125	1.250	1.41	2.75	2.62	.88	.94	.2756	.8661	.781	1.600	1.18	1/2-13	5/8-11

IRO STYLE
For Shaped Punches

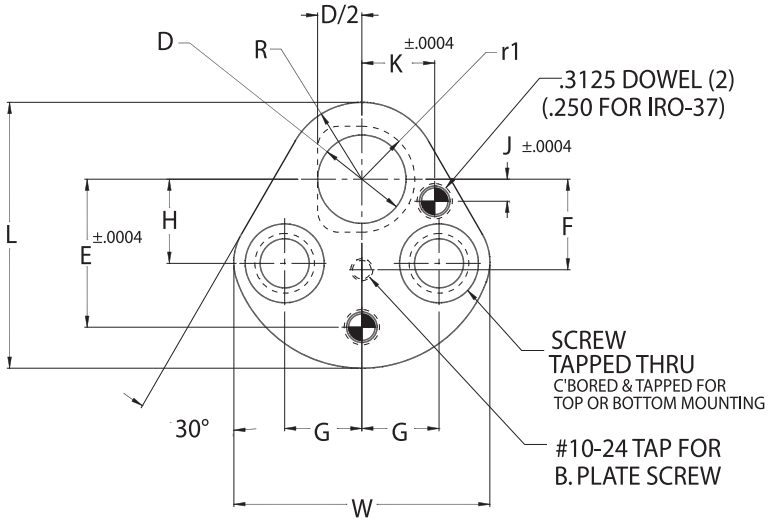

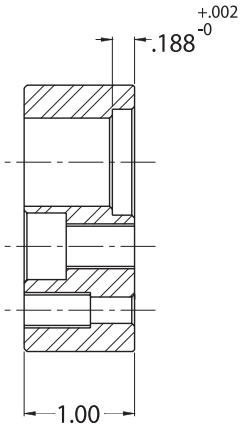

Complete design & CAD files visit WWW.MOELLERMCAD.COM

CATALOG NUMBER	D	r1	L	W	R	H	±.0004 J	±.0004 K	G	±.0004 E	F	SCREW SIZE	TAP
IRO 37	.375	.53	1.75	1.57	.38	.75	.2953	.3543	.438	1.060	.63	5/16-18	3/8-16
IRO 50	.500	.66	2.00	1.90	.50	.75	.2559	.4724	.562	1.180	.63	5/16-18	3/8-16
IRO 62	.625	.78	2.12	2.03	.56	.75	.2362	.5315	.625	1.250	.63	5/16-18	3/8-16
IRO 75	.750	.91	2.37	2.29	.69	.75	.1968	.6496	.688	1.320	.91	5/16-18	3/8-16
IRO 100	1.000	1.18	2.75	2.62	.88	.94	.2756	.8661	.781	1.600	1.18	1/2-13	5/8-11
IRO 125	1.250	1.41	2.75	2.62	.88	.94	.2756	.8661	.781	1.600	1.18	1/2-13	5/8-11

MRN STYLE
For Round Punches

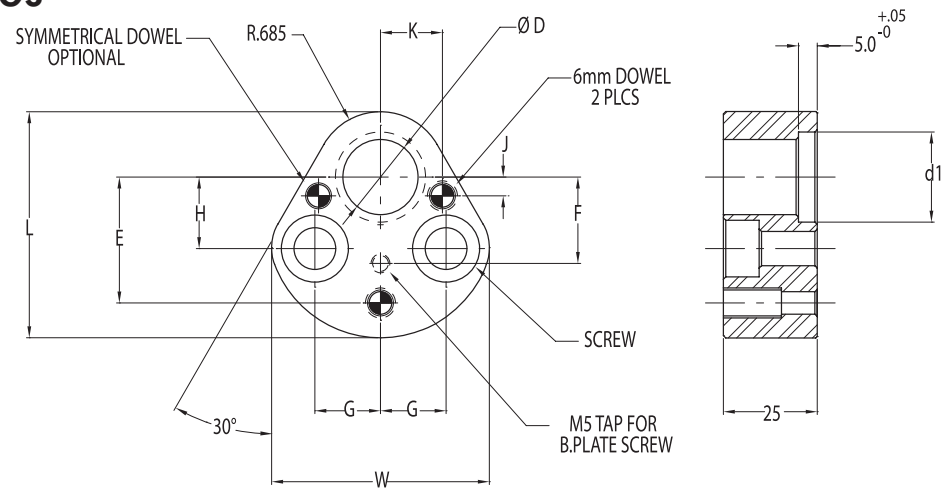

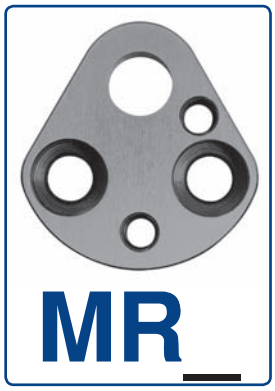

FOR ACCESSORIES AND BACKING PLATES SEE PAGES 14-15.

Complete design & CAD files visit WWW.MOELLERMCAD.COM

CATALOG NUMBER	D	d1	L	W	R	H	±.01 J	±.01 K	G	±.01 E	F	SCREW SIZE
MRN 10	10	14.0	44.5	39.9	9.5	19.05	7.50	9.00	11.12	26.924	16.00	M8
MRN 13	13	17.0	50.8	48.3	12.7	19.05	6.50	12.00	14.27	29.972	16.00	M8
MRN 16	16	20.0	54.0	51.6	14.3	19.05	6.00	13.50	15.87	31.750	16.00	M8
MRN 20	20	24.0	60.3	58.2	17.5	19.05	5.00	16.50	17.47	33.528	23.00	M10
MRN 25	25	29.0	69.9	66.5	22.2	23.82	7.00	22.00	19.84	40.640	30.00	M12
MRN 32	32	36.0	69.9	66.5	22.2	23.82	7.00	22.00	19.84	40.640	30.00	M12

MRO STYLE
For Shaped Punches

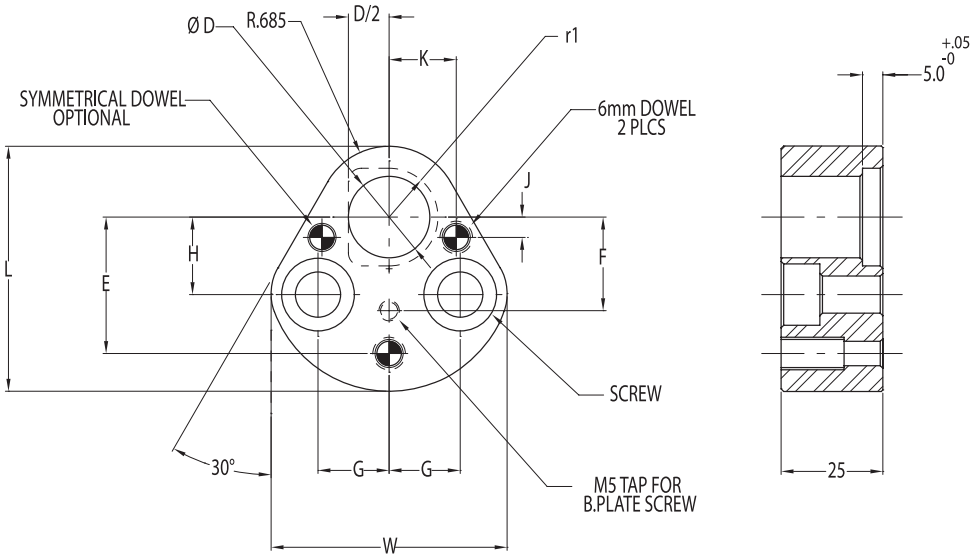

Complete design & CAD files visit WWW.MOELLERMCAD.COM

CATALOG NUMBER	D	r1	L	W	R	H	±.01 J	±.01 K	G	±.01 E	F	SCREW SIZE
MRO 10	10	7.0	44.5	39.9	9.5	19.05	7.50	9.00	11.12	26.924	16.00	M8
MRO 13	13	8.5	50.8	48.3	12.7	19.05	6.50	12.00	14.27	29.972	16.00	M8
MRO 16	16	10.0	54.0	51.6	14.3	19.05	6.00	13.50	15.87	31.750	16.00	M8
MRO 20	20	12.0	60.3	58.2	17.5	19.05	5.00	16.50	17.47	33.528	23.00	M10
MRO 25	25	14.5	69.9	66.5	22.2	23.82	7.00	22.00	19.84	40.640	30.00	M12
MRO 32	32	18.0	69.9	66.5	22.2	23.82	7.00	22.00	19.84	40.640	30.00	M12

BALL LOCK RETRACTABLE

TRUE-SET • DUAL POSITION

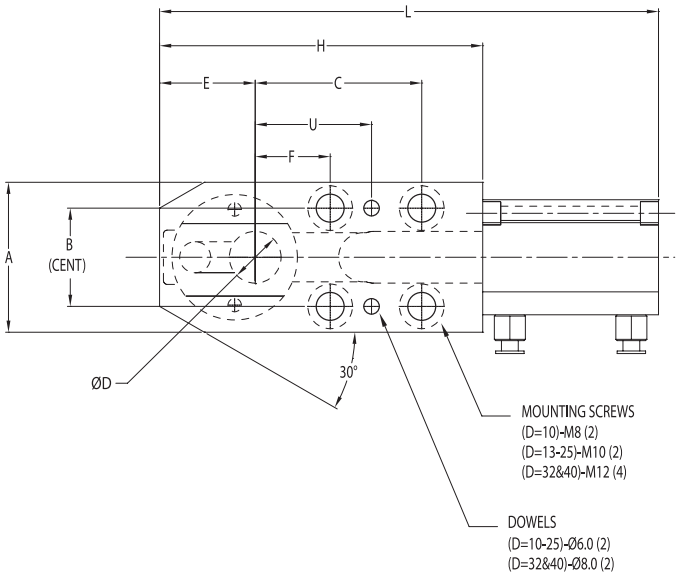

MRA

Moeller dual-position ball lock retractable retainers provide the capability to add, or subtract, holes quickly without affecting demanding production schedules, and without the added cost of additional tooling. Moeller dual-position ball lock retractable retainers are available to conform to NAAMS, and leading automotive standards. Position B facilitates close-space applications by moving the punch 12mm closer to the front end of the retainer. Moeller dual-position ball lock retainers feature a strong and convenient one- piece body, eliminating the need for a separate safety shield.

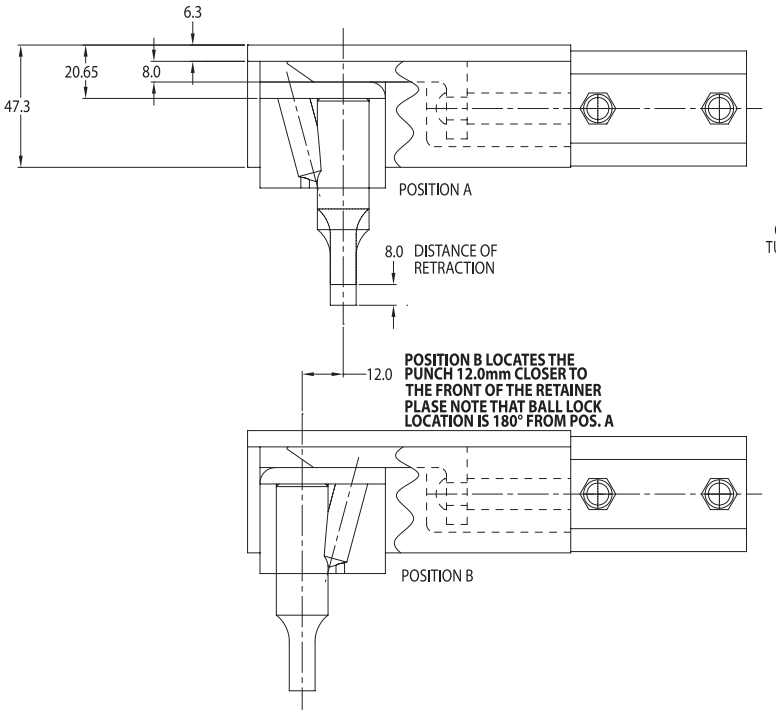

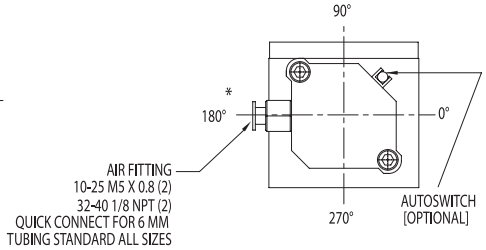

RECOMMENDED AIR PRESSURE:
4.60-5.3 kgf/cm² (65-75 PSI)

MINIMUM PRESSURE:
3.2 kgf/cm² (45 PSI)

MAXIMUM PRESSURE:
10.2 kgf/cm² (145 PSI)

NOTE:
CHANGE RETAINER SET INCLUDES ALL NECESSARY SCREWS AND DOWELS,AIR CYLINDER AND FITTINGS. TUBING FOR AIR SUPPLY AND AUTOSWITCH ARE NOT INCLUDED AND MUST BE ORDERED SEPARATELY.
CONSULT FACTORY FOR ADDITIONAL ACCESSORIES.

CATALOG NUMBER	D	L	A	±.01 B	C POS.A	C POS.B	E POS.A	E POS.B	F POS.A	F POS.B	H	U ±.01 POS.A	U ±.01 POS.B	SCREW SIZE
MRA 10	10	161	46	30			28	16	21	33	93.5	37	49	M8
MRA 13	13	172.5	50	30			28	16	25	37	100	41	53	M10
MRA 16	16	177	50	30			31	19	25	37	104.5	41	53	M10
MRA 20	20	191.5	58	38			32.5	20.5	29	41	113.5	45	57	M10
MRA 25	25	206.5	58	38			35	23	29	41	123.5	45	57	M10
MRA 32	32	260	80	56	100	112	38	26	38	50	152	60	72	M12
MRA 40	40	264	80	56	100	112	42	30	38	50	156	60	72	M12

ORDERING EXAMPLE: MRA 13, OR MRA 13 POSITION B

BALL LOCK RETRACTABLE

TRUE-SET • SHOULDER

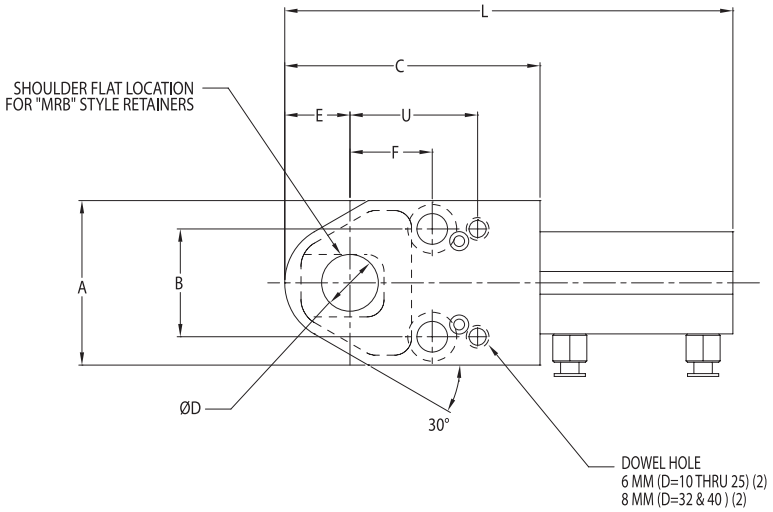

Moeller shoulder retractable retainers provide the capability to add, or subtract, holes quickly without affecting demanding production schedules, and without the added cost of additional tooling. Moeller shoulder retractable retainers feature a strong and convenient one- piece body, eliminating the need for a separate safety shield.

RECOMMENDED AIR PRESSURE:
4.60-5.3 kgf/cm^2 (65-75 PSI)

MINIMUM PRESSURE:
3.2 kgf/cm^2 (45 PSI)

MAXIMUM PRESSURE:
10.2 kgf/cm^2 (145 PSI)

NOTE:
CHANGE RETAINER SET INCLUDES ALL NECESSARY SCREWS AND DOWELS,AIR CYLINDER AND FITTINGS. TUBING FOR AIR SUPPLY AND AUTOSWITCH ARE NOT INCLUDED AND MUST BE ORDERED SEPARATELY. CONSULT FACTORY FOR ADDITIONAL ACCESSORIES.

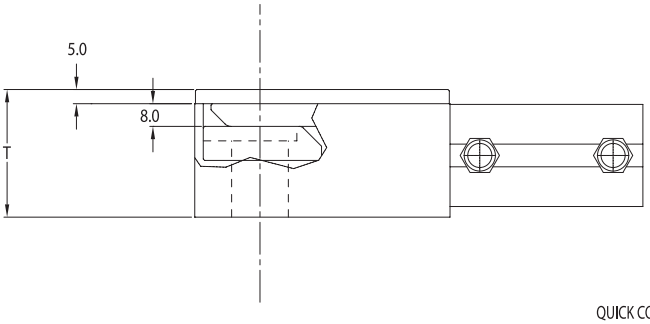

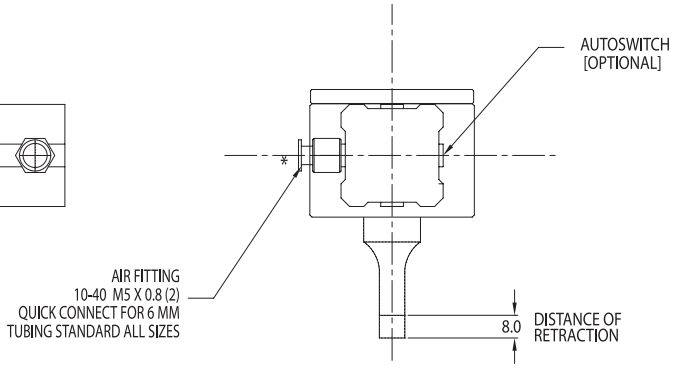

CATALOG NUMBER	CATALOG NUMBER	D	L	A	±.01 B	C	E	F	T	±.01 U	SCREW SIZE
MRC 10	MRB 10	10	128	46	30	73	18	25	45	41	M8
MRC 13	MRB 13	13	128	49	30	73	18	25	45	41	M10
MRC 16	MRB 16	16	128	49	30	73	18	25	45	41	M10
MRC 20	MRB 20	20	155	58	38	90	23	29	45	45	M10
MRC 25	MRB 25	25	155	58	38	90	23	29	45	45	M10
MRC 32	MRB 32	32	208	80	56	125	33	38	55	60	M12
MRC 40	MRB 40	40	208	80	56	125	33	38	55	60	M12

ORDERING EXAMPLE: MRC 13 (FOR ROUND POINT PUNCH)
ORDERING EXAMPLE: MRB 13 (FOR SHAPED POINT PUNCHES – PLEASE NOTE FLAT LOCATION WHEN ORDERING PUNCHES)

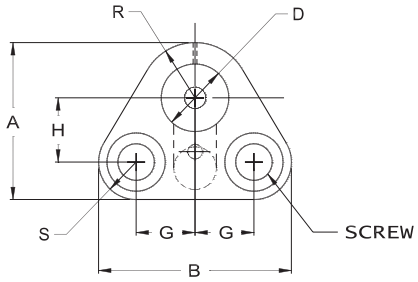

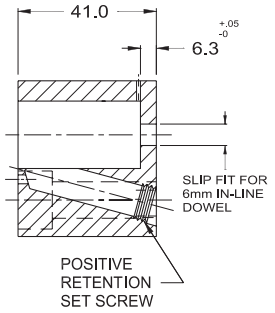

Manufactured under Patent No.'s 0351395, 5357835 International Patents Pending.

FOR ACCESSORIES SEE PAGES 14-15.

MRM

HEAVY DUTY

Complete design & CAD files visit WWW.MOELLERMCAD.COM

CATALOG NUMBER	DIA.	A	B	G	H	R	S	SCREW SIZE
MRM 10	10	37.8	40.6	11.1	19.0	9.5	9.2	M8
MRM 13	13	40.3	47.6	14.3	19.0	11.7	9.5	M8
MRM 16	16	42.1	50.8	15.9	19.0	13.5	9.5	M8
MRM 20	20	46.5	57.1	17.5	19.0	16.4	11.1	M10
MRM 25	25	56.5	65.1	19.8	23.8	20.0	12.7	M12
MRM 32	32	58.2	64.0	19.8	23.8	22.2	12.2	M12
MRM 40	40	67.3	76.2	24.0	27.0	26.0	14.3	M12

TRUE SET STRIPPERS

NOSE LARGE STRIPPER RETAINER

(To be used with the Standard MRH True Set Retainer)

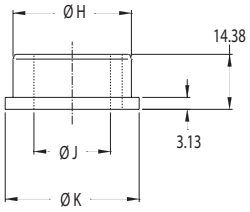

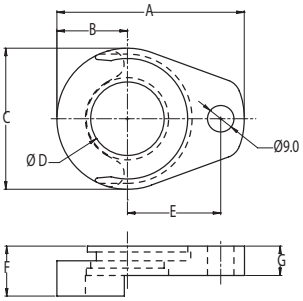

International Patents Pending.
*XX = "L" DIMENSION OF URETHANE

MTB

Complete design & CAD files visit WWW.MOELLERMCAD.COM

CATALOG TYPE	SHANK Ø	MAX P/G	A	B	C	D	E	F	G	H	J	K	*USE WITH URETHANE
MTB010016	10.0	15.75	53.18	18.0	36	16	26.93	17	10	15.75	10	19	MTS16-XX
MTB013020	13.0	19.75	58.60	20.5	41	20	29.97	17	10	19.75	13	23	MTS20-XX
MTB016025	16.0	24.75	63.75	24.0	48	25	31.75	17	10	24.75	16	28	MTS25-XX
MTB020032	20.0	31.75	73.86	31.0	62	32	33.53	17	10	31.70	20	34	MTS32-XX
MTB025040	25.0	39.75	83.63	36.0	72	40	40.64	17	10	39.70	25	44	MTS40-XX
MTB032040	32.0	39.75	83.63	36.0	72	40	40.64	18	10	39.70	32	44	MTS40-XX

URETHANE HARDNESS 95 SHORE A

Heavy Duty Ball Lock Punch Length	Recommended Stripper Length "L"
80	43
90	52
100	63

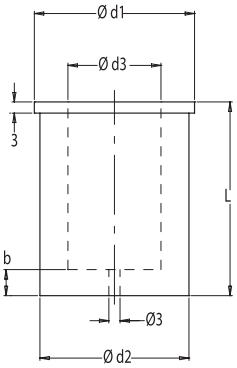

CATALOG TYPE	SHANK Ø	L +1.0/-0.6 STRIPPER LENGTHS	d3	d1	d2	b	VENT HOLE
*MTS16-XX TO BE USE ON MTB010016	10.0	43 52 63	15.75	31	28	6	3
*MTS20-XX TO BE USE ON MTB013020	13.0	43 52 63	19.75	36	33	7	3
*MTS25-XX TO BE USE ON MTB016025	16.0	43 52 63	24.75	43	40	7	3
*MTS32-XX TO BE USE ON MTB020032	20.0	43 52 63	31.75	55	50	7	3
*MTS40-XX TO BE USE ON MTB025040	25.0	43 52 63	39.75	65	60	8	3
*MTS40-XX TO BE USE ON MTB032040	32.0	43 52 63	39.75	65	60	8	3

- Innovative One-Piece construction
- Patented cost savings "Snap in" retention feature
- Interchangeable and complies with NAAMS Standards
- Precision Machined to assure perpendicularity resulting to prolonged Urethane life
- Adaptable to special multi-hole Retainers

MTR STYLE STRIPPER RETAINER

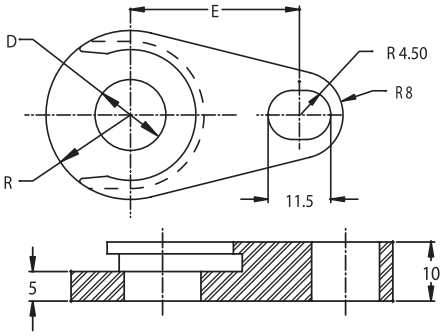

Note: Use with IRH/MRH style retainer.

Catalog No.	D	R	E
MTR-10	10	13	28
MTR-13	13	15.5	31
MTR-16	16	18	32.9
MTR-20	20	20.5	34.8
MTR-25	25	24	39.8
MTR-32	32	31	41.3
MTR-40	40	36	45

MTM STYLE STRIPPER RETAINER

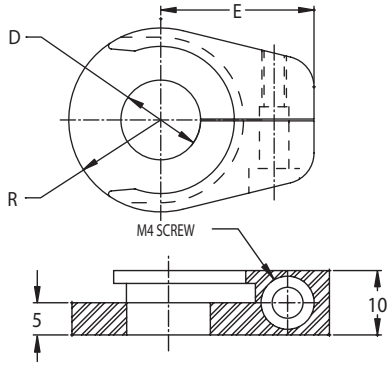

Note: Use with IRR/MRR/MRM & special multi hole style retainers.

Catalog No.	D	R	E
MTM-10	10	13	22.5
MTM-13	13	15.5	25
MTM-16	16	18	27.5
MTM-20	20	20.5	30
MTM-25	25	24	35.5
MTM-32	32	31	37.5
MTM-40	40	36	42.3

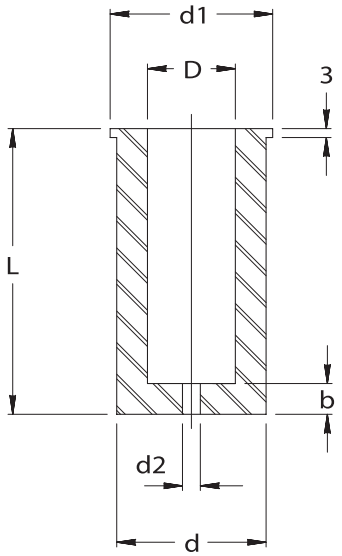

URETHANE HARDNESS 95 SHORE A

Heavy Duty Ball Lock Punch Length	Light Duty Ball Lock Punch Length	Recommended Stripper Length "L"
80	71	43
90	80	52
100	90	63
110	100	72

URETHANE STRIPPERS

Stripper Catalog Number	Punch Shank	Press Fit D	d	L	d1	d2	b
MTS10-43 *44	10	9.75	18	43 *44	21	1.6	6
MTS10-52 *54	10	9.75	18	52 *54	21	1.6	6
MTS10-63 *64	10	9.75	18	63 *64	21	1.6	6
MTS10-72 *74	10	9.75	18	72 *74	21	1.6	6
MTS13-43 *44	13	12.75	23	43 *44	26	3.0	6
MTS13-52 *54	13	12.75	23	52 *54	26	3.0	6
MTS13-63 *64	13	12.75	23	63 *64	26	3.0	6
MTS13-72 *74	13	12.75	23	72 *74	26	3.0	6
MTS16-43 *44	16	15.75	28	43 *44	31	3.0	6
MTS16-52 *54	16	15.75	28	52 *54	31	3.0	6
MTS16-63 *64	16	15.75	28	63 *64	31	3.0	6
MTS16-72 *74	16	15.75	28	72 *74	31	3.0	6
MTS20-43 *44	20	19.75	33	43 *44	36	3.0	7
MTS20-52 *54	20	19.75	33	52 *54	36	3.0	7
MTS20-63 *64	20	19.75	33	63 *64	36	3.0	7
MTS20-72 *74	20	19.75	33	72 *74	36	3.0	7
MTS25-43 *44	25	24.75	40	43 *44	43	3.0	7
MTS25-52 *54	25	24.75	40	52 *54	43	3.0	7
MTS25-63 *64	25	24.75	40	63 *64	43	3.0	7
MTS25-72 *74	25	24.75	40	72 *74	43	3.0	7
MTS32-43 *44	32	31.70	50	43 *44	55	3.0	7
MTS32-52 *54	32	31.70	50	52 *54	55	3.0	7
MTS32-63 *64	32	31.70	50	63 *64	55	3.0	7
MTS32-72 *74	32	31.70	50	72 *74	55	3.0	7
MTS40-43 *44	40	39.70	60	43 *44	65	3.0	8
MTS40-63 *64	40	39.70	60	63 *64	65	3.0	8

*** Alternative Length Available**

BALL LOCK ACCESSORIES

TRUE-SET

INCH

	TRUE SET RETAINER	SOC.HD. CAP SCREW	DOWELS	BALL	SPRING	BALL RELEASE SCREW	ANGLE HOLE SET SCREW
HEAVY DUTY	IRH 37	IAC 31-175 5/16-18 x 1-3/4	IAD 18-75 3/16 x 3/4	IAB 37 3/8 DIA.	IAS 37 3/8 DIA. H.D.	IAC 10-100 10-24 x 1	IAN 37
	IRH 50	IAC 37-200 3/8-16 x 2	IAD 25-75 1/4 x 3/4	IAB 50 1/2 DIA.	IAS 50 1/2 DIA.		IAN 50
	IRH 62						
	IRH 75						
	IRH 87						
	IRH 100	IAC 50-200 1/2 - 13 x 2					
	IRH 125						
LIGHT DUTY	IRL 25	IAC 31-150 5/16-18 x 1-1/2	IAD 12-75 1/8 x 3/4	IAB 25 1/4 DIA.	IAS 25 1/4 DIA.	IAC 08-100 8-32 x 1	
	IRL 37		IAD 18-75 3/16 x 3/4				
	IRL 50	IAC 37-150 3/8-16 x 1-1/2	IAD 25-75 1/4 x 3/4	IAB 31 5/16 DIA.	IAS 31 5/16 DIA.		
	IRL 62						
	IRL 75						
	IRL 87			IAB 37 3/8 DIA.	IAS 37 3/8 DIA. L.D.		
	IRL 100	IAC 50-175 1/2-13 x 1-3/4					
	IRL 125						

METRIC

	TRUE SET RETAINER	SOC.HD. CAP SCREW	DOWELS	BALL	SPRING	BALL RELEASE SCREW	ANGLE HOLE SET SCREW
HEAVY DUTY	MRH 10	MAC 8-45 M8 x 45	MAD 6-20 6mm x 20	MAB 10 10mm	MAS 10 (W/CLIP) MAS 10T (W/SCREW) 10mm	MAC 4-20 M4 X 20	MAN 10
	MRH 13						MAN 12
	MRH 16				MAS 12 (W/CLIP) MAS 12T (W/SCREW) 12mm 13mm/40mm		
	MRH 20	MAC 10-50 M10 x 50					
	MRH 25	MAC 12-50 M12 x 50					
	MRH 32						
	MRH 40						
LIGHT DUTY	MRL 06	MAC 6-35 M6 X 35	MAD 3-20 3mm x 20 MAD 6-20 6mm x 20	MAB 6 6mm	MAS 6 6mm	MAC 3-15 M3 x 15	
	MRL 10	MAC 8-35 M8 x 35	MAD 6-20 6mm x 20	MAB 8 8mm	MAS 8 8mm	MAC 4-20 M4 x 20	
	MRL 13						
	MRL 16						
	MRL 20	MAC 10-40 M10 x 40					
	MRL 25	MAC 12-40 M12 x 40					

TRUE-SET BALL LOCK SHIM PLATES

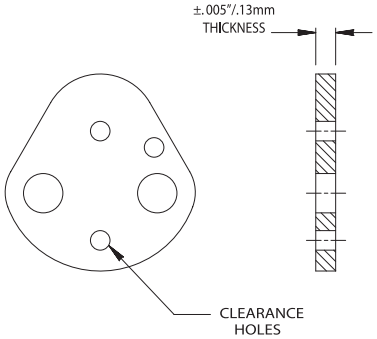

CATALOG NUMBER INCH	CATALOG NUMBER METRIC
IAX 25	MAX 10
IAX 37	MAX 13
IAX 50	MAX 16
IAX 62	MAX 20
IAX 75	MAX 25
IAX 87	MAX 32
IAX 100	MAX 40
IAX 125	

AVAILABLE THICKNESS INCH	ORDERING NUMBER INCH
.071	071
.118	118
.125	125
.187	187
.236	236
.250	250
.394	394
.512	512

AVAILABLE THICKNESS METRIC	ORDERING NUMBER METRIC
1.8	018
3.0	030
3.18	031
4.75	047
6.0	060
6.35	063
10.0	100
13.0	130

ORDERING EXAMPLE: IAX 50-125

SR *OPEN IN-LINE DOWEL FOR SLUG RELIEF*

SPECIAL BACKING PLATE RETAINER ACCESSORIES

ANGLE HOLE	SPRINGS	BALL
1/4 DIA.	IAS 25S	IAB 25
5/16 DIA.	IAS 31S	IAB 31
3/8 DIA.	IAS 37S	IAB 37
1/2 DIA.	IAS 50S	IAB 50

ANGLE HOLE	SPRINGS	BALL
6mm DIA.	MAS 6S	MAB 6
8mm DIA.	MAS 8S	MAB 8
10mm DIA.	MAS 10S	MAB 10
12mm DIA.	MAS 12S	MAB 12

ECONOMY ROUND TRUE-SET BALL LOCK ACCESSORIES

TRUE SET RETAINER	SOC.HD. CAP SCREW	DOWELS	BALL	SPRING	BALL RELEASE SCREW	ANGLE HOLE SET SCREW
IRR 37	IAC43-175 TL 7/16"-14 x 1.75	IAD 18-75 3/16 X 3/4	IAB 37 3/8 DIA.	IAS 37T 3/8 DIA. H.D.	IAC 10-100 10-24 x 1	IAN 37
IRR 50		IAD 25-75 1/4 x 3/4	IAB 50 1/2 DIA.	IAS 50T 1/2 DIA. H.D.		IAN 50
IRR 62						
IRR 75	IAC62-200 TL 5/8"-11 x 2.0 LONG					
IRR 87						
IRR 100						
IRR 125	IAC75-200 TL 3/4"-10 x 2.0 LONG					

TRUE SET RETAINER	SOC.HD. CAP SCREW	DOWELS	BALL	SPRING	BALL RELEASE SCREW	ANGLE HOLE SET SCREW
MRR 10	MAC 12-50 TL M12-1.75 x 50mm	MAD 6-20 6mm X 20	MAB 10 10mm	MAS 10T 10 mm	MAC 4-20 4mm X 20	MAN 10
MRR 13			MAB 12 12mm	MAS 12T 12mm		MAN 12
MRR 16						
MRR 20	MAC16-50 TL M16-2.0 x 50mm					
MRR 25						
MRR 32	MAC20-50 TL M20-2.5 x 50mm					
MRR 40						

ECONOMY ROUND TRUE-SET BALL LOCK SHIM PLATES

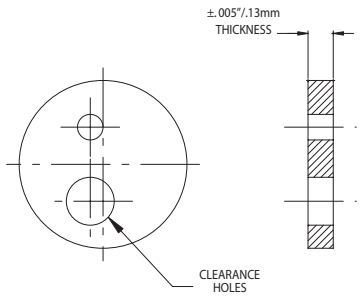

CATALOG NUMBER INCH	CATALOG NUMBER METRIC
IAY 37	MAY 10
IAY 50	MAY 13
IAY 62	MAY 16
IAY 75	MAY 20
IAY 87	MAY 25
IAY 100	MAY 32
IAY 125	MAY 40

AVAILABLE THICKNESS INCH	ORDERING NUMBER INCH
.071	071
.118	118
.125	125
.187	187
.236	236
.250	250
.394	394
.512	512

AVAILABLE THICKNESS METRIC	ORDERING NUMBER METRIC
1.8	018
3.0	030
3.18	031
4.75	047
6.0	060
6.35	063
10.0	100
13.0	130

ORDERING EXAMPLE: IAY 50-125

INCH

TRUE SET SHOULDER RETAINER	SOC.HD. CAP SCREW	DOWELS
IRN-37 / IRO-37	IAC 31-150 5/16-18 X 1.50 LONG	IAD 25-75 Ø.250 X .75 LONG
IRN-50 / IRO-50		IAD 31-150 Ø.3125 X 1.50 LONG
IRN-62 / IRO-62		
IRN-75 / IRO-75		
IRN-100 / IRO-100	IAC 50-175 1/-13 X 1.75 LONG	
IRN-125 / IRO-125		

METRIC

TRUE SET SHOULDER RETAINER	SOC.HD. CAP SCREW	DOWELS
MRN-10 / MRO-10	MAC 8-35 M8 X 35mm LONG	MAD 6-20 Ø6.00 X 20mm LONG
MRN-13 / MRO-13		
MRN-16 / MRO-16		
MRN-20 / MRO-20	MAC 10-40 M10 X 40mm LONG	
MRN-25 / MRO-25	MAC 12-40 M12 X 40mm LONG	
MRN-32 / MRO-32		

TRUE-SET SHOULDER RETAINER BACKING PLATES

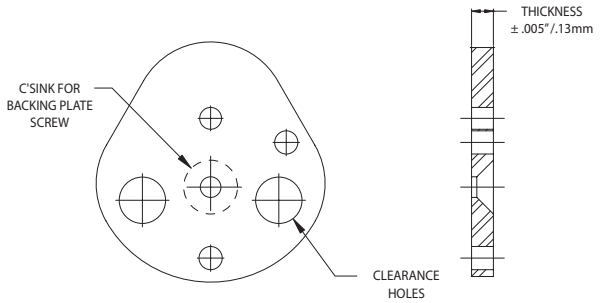

CATALOG NUMBER INCH	CATALOG NUMBER METRIC
IAW 37	MAW 10
IAW 50	MAW 13
IAW 62	MAW 16
IAW 75	MAW 20
IAW 100	MAW 25
IAW 125	MAW 32

AVAILABLE THICKNESS INCH	ORDERING NUMBER INCH
.188	188
.250	250

AVAILABLE THICKNESS METRIC	ORDERING NUMBER METRIC
4.75	047
6.35	063

ORDERING EXAMPLE: IAW 50-063

MINI TRUE-SET RETAINER SHIM PLATES

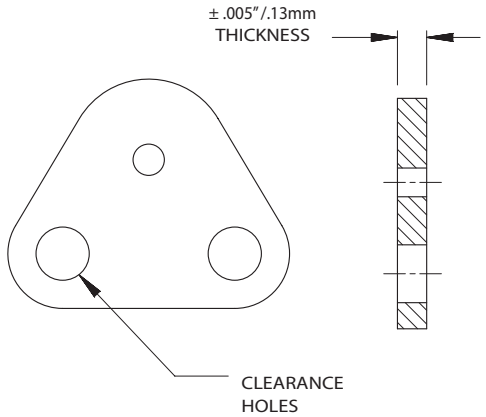

CATALOG NUMBER
MAM 10
MAM 13
MAM 16
MAM 20
MAM 25
MAM 32
MAM 40

AVAILABLE THICKNESS INCH	ORDERING NUMBER INCH
3.0	030
6.0	060
10.0	100
13.0	130

ORDERING EXAMPLE: MAM 13-060

BALL RELEASE TOOLS

ANGLE TIP
(for all Retainers) Metric Cat. No. MAT 01 Inch Cat. No. IAT 01

STRAIGHT TIP
(for all Retainers) Metric Cat. No. MAT 02 Inch Cat. No. IAT 02

THREADED TIP HEAVY DUTY
(for True Set Retainers)
Metric Cat. No. MAT 03 Inch Cat. No. IAT 03

THREADED TIP LIGHT DUTY
(for True Set Retainers) Metric Cat. No. MAT 03 Inch Cat. No. IAT 04

ANGLE HOLE SET SCREW TOOL
(for True Set Retainers) Metric Cat. No. MAO 01 Inch Cat. No. IAO 01

MOELLER PRECISION TOOL

M-CAD DESIGN™

... Your Global Source For Standard and Special Die Components

www.moellermcad.com
For Complete Solid Models

STANDARD CATALOG ITEMS

- PUNCHES
- DIE BUTTONS
- RETAINERS
- STRIPPERS
- ACCESSORIES
- DIE SPRINGS
- NITROGEN CYLINDERS

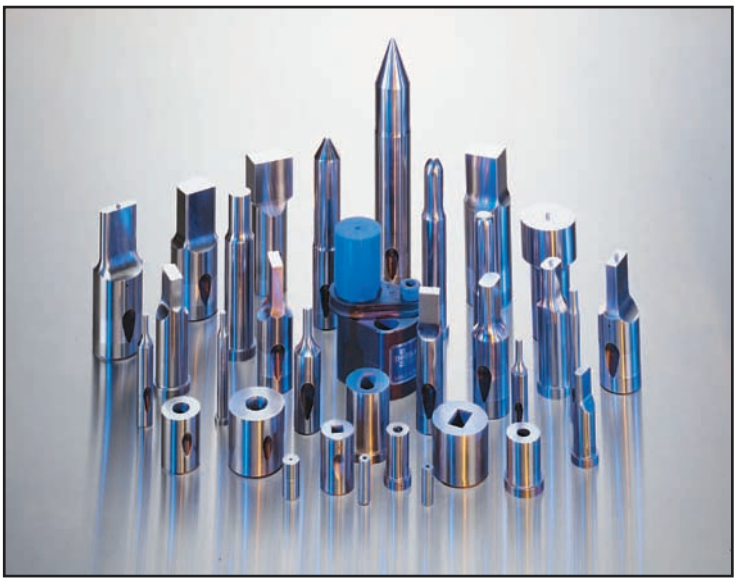

CUSTOM MADE SPECIAL DETAILS

- SPECIAL SHAPED PIERCING COMPONENTS
- COMPLEX TRIMMING, FORMING, COINING AND BENDING TOOLS.
- PILOTS, GUIDING MEMBERS, LOCATING AND TRANSFERRING COMPONENTS

CORPORATE HEADQUARTERS
30893 CENTURY DRIVE • WIXOM, MICHIGAN 48393
LOCAL (248) 668-1166 • TOLL FREE (800) 521-7613 • FAX (248) 668-1004

CERTIFIED ISO 9001:2008

BRANCH OFFICE
7116 CROSSROADS BLVD.
BRENTWOOD, TENNESSEE 37027
LOCAL (615) 373-3431 • TOLL FREE (800) 227-7019
FAX (615) 371-9190

MOELLER MANUFACTURING DE MEXICO
CIRCUITO EL MARQUES SUR# 43 • PARQUE INDUSTRIAL EL MARQUES
EL MARQUES, QUERETARO C.P. 76246
LOCAL (442) 253-12-00 • FAX (442) 253-12-01
WWW.MOELLERDEMEXICO.COM.MX

E-Quote: quote@moellerpunch.com • WWW.MOELLERPRECISIONTOOL.COM

The entire contents of this brochure ©2012 Moeller Precision Tool. Rev 05/2012